amateur radio

Vol. 35, No. 12
DECEMBER
1967

25c

Registered at G.P.O., Melbourne, for transmission by post as a periodical

CITIZENS BAND CRYSTALS

To suit Japanese Walkie-Talkies and Transceivers P.M.G. approved. Freq. 27.240 Mc. (tx), 26.785 Mc. (rx).

HC6/U Subminiature ½ in pin spacing, 27.240 or 26.785. **$3.50 each** or **$6.50 a pair.**

HC18/U Miniature ¼ in. pin spacing, 27.240 or 26.785. **$3.50 each** or **$6.50 a pair.**

(HC18/U also available with flying leads.)

MULTIMETER Model 200H

20,000 ohms per volt d.c., 10,000 ohms per volt a.c. **Specifications.**—DC Volts: 0-5, 25, 50, 250, 500, 2,500. AC Volts: 0-10, 50, 100, 500, 1,000. DC Current: 0-50 uA.; 25, 250 mA. Resistance: 0-60K ohms, 0-6 meg. Capacity: 0.01-0.3 uF. (at AC 5v.); 0.0001-0.01 uF. (at AC 250v.). Decibel: Minus 20 db plus 22 db. Output range: 0-10, 50, 100, 500, 1,000. Battery used: UM3 1.5v., 1-piece. Dimensions: 3¼ x 4½ x 1⅛ in. **Price $11.00** Post Free. Complete with internal battery, testing leads, prods.

TURNTABLE BASES

Unpolished, to suit Garrard, Balfour, Princess, Dual 1010. **Price $7.00 each.**

All Channel Transistorised TV Antenna Boosters, **Price $10 each.** Post 50c.

PK633 BROADCAST TUNER

550 Kc. to 1600 Kc. a.m. circuit. 3 Transistors, one diode. Tuner Assembly, excluding audio amplifier, driver and output circuitry and etched printed circuit board. Containing a variable condenser, oscillator, converter, i.f's detector, and associated components. Power 9 volts d.c. Dimensions: 4½ x 2½ x 2½ in. **Special Price $11.75.**

STEREOGRAM AND TUNER CHASSIS

Medium Fidelity, 4-valve (two 6BM8s, one 6N8, 6N7), Aust. made. Straight line dial, mono tuner, 15 ohm, approx. 3 watts per channel output, as new. Fully tested, ideal for use as Tuner or Built-in Unit, etc. **Price $30** inc. new valves, or **$25** less valves. MSP 6 in. speakers to suit, **$4.50 ea.**

STEREO RECORD CHANGER

Balfour "Princess" Stereo, 4-speed, automatic 10 record changer. Made in England. Complete with Ronette Ceramic Cartridge. Brand new in carton. **Price $25** inc. post.

STEREO AMPLIFIERS

Model ST-100, valve type, 5 watts per channel.. Frequency response, 50-15,000 c/s, 4, 8, 16 ohm output, crystal and ceramic inputs. **Price $38.00.**

Model TRM-10, 5 watts per channel, Solid State, 8 ohm, etc., output. Frequency response, 40-15,000 c/s, plus or minus 3 db. Crystal or Ceramic inputs. **Price $68.75.**

Model TRM-20, 10 watts per channel, Solid State, 8 ohm load, etc. Freq. response: 30-16,000 c/s. plus or minus 3 db. Magnetic and Ceramic inputs. Filters and Tape facilities. **Price $106.25.**

Model TRM-40, 22 watts per channel, Solid State, 8 ohm load. Freq. response: 20-20,000 c/s, plus or minus 1 db. Magnetic, Ceramic and Tape inputs. Scratch and Rumble Filters, Loudness Control, etc. **Price $126.00.**

Solid State, Stereo Phono-Tape, Pre-Amplifier. AC operated. Freq. response: 30-18,000 c/s. Normal input 5 mV., matches most types of Magnetic Cartridges and Tape Heads. Output max. 900 mV. **Price $19.50.**

TRIO COMMUNICATIONS RECEIVERS

Trio Model 9R59DE, four bands covering 540 Kc. to 30 Mc., two mechanical filters for maximum selectivity, Product Detector for SSB reception. Large tuning and bandspread dials for accurate tuning. Automatic noise limiter, calibrated electrical bandspread. S meter and BFO. 2 microvolts sensitivity for 10 db S-N ratio. **Price $160.88** inc. packing.

OTHER RECEIVERS AVAILABLE

TRIO JR-200 550 Kc. to 31 Mc., seven tubes, bandspread tuning, four bands. **Price $124.67.**

TRIO JR-60 540 Kc. to 30 Mc. and 142 to 148 Mc. in five bands, 14 tubes, calibrated electrical bandspread, SSB-AM-FM. **Price $253.55.**

TRIO JR-500SE Amateur Band Receiver, seven bands, covering 3.5 Mc. to 29.8 Mc. Crystal locked front end, transistor VFO with external output. Crystal locked BFO, mechanical i.f. filters, WWV section for calibration check, S meter and ANL, Product Detector for high quality SSB reception. **Price $268.08.**

TRADE-IN ACCEPTED

F.M. TAXI RADIOS

T.C.A. (Philips) Low Band, FM Mobile Units, 12 volts, xtal locked, 120 Kc. bandwidth, operating frequency approx. 80 Mc., complete with all valves and vibrator and microphone. Suit Amateur conversion. Good condition. **Our Price, less Xtals, $25** freight and packing extra.

TRANSISTOR INTERCOM UNITS

Four-Station: 1 master, 3 sub-stations. 3 Transistors, 250 mW. Amplifier. Battery operated (Eveready 216), complete with battery, wire, staples and fitting instructions. **Price $19.75.**

Two Station Model also available. **Price $10.50.**

Three-Station Intercoms, as per above, one master and two sub-stations. **Price $14.75.**

FERROCART POCKET MULTIMETER

Model PT34. 300 uA. movement. AC and DC Voltages: 0-10, 50, 250, 500, 1,000v. Current ranges (mA.): 0-1, 100, 500. Ohms range: 0-100,000. Size 3¾ x 2½ x 1¼ inches. **Price $5.75.** Complete with leads.

BATTERY SAVER or A.C. ADAPTOR
A & R Type PS64

- **Unlimited operation of battery operated transistor equipment from 240v. a.c. mains at negligible power cost.**
- Ideal or 6 or 9v. Transistor Radios, Tape Recorders, Transistorised Small Amplifiers and Test Equipment.
- Approved by Electricity Supply Authorities.
- Maximum voltage limited to 7.75v. or 11v. at low current to protect transistors and capacitors.
- Filtered to ensure hum-free operation.
- 6 or 9v. (nominal voltage) selected by external switch.

Specifications.—Input: 220-240v. 50 c.p.s. Output DC: 7.75/11v. over no load to full load current range; or 5.6/7.75v. over no load to ull load current range. Ripple voltage: 6v. output, 1.5 per cent. max. Ripple voltage: 9v. output, 0.5 per cent. max. Dimension 3½ x 2½ x 2 in. **Price $10.50.**

WALKIE-TALKIE TRANSCEIVERS
CITIZENS BAND

"Communicator" Model WT400, 4 transistors, 27.240 Mc. Crystal locked transmitter, 50 mW. output. Range approx. 2 miles open country. **Price $35.00 a pair.**

"Lamie" Model FRT907, 9 transistors, superheterodyne, crystal locked receiver and transmitter, 100 mW. output. 27.240 Mc., P.M.G. approved. Range approx. 5 miles in open country. **Price $59.50 a pair.**

"Tokai" Model TC-911, 9 transistors, superheterodyne, crystal locked, individual speaker and microphone. P.M.G. approved 27.240 Mc. All metal construction, complete with leather case. Range approx. 1 to 8 miles in open country. **Price $80.00 a pair.**

Spare Aerials for above sets, **$3.80 each.** Other Spares readily available.

2 Watt and **5 Watt Transceivers** are available also. Price on application.

LOUDSPEAKERS, "PEAK" HI-FI

Type	Size	Frequency C/S	Maximum Input	Price
Twin Cone Types:				
6A7	6 in.	60-16,000	5 watts	**$5.50**
8A7	8 in.	50-16,000	8 watts	**$7.50**
12A9	12 in.	30-13,000	20 watts	**$18.75**
Coaxial Type with "Free Edge" bass cone and horn tweeter				
8CX50	8 in.	30-22,000	15 watts	**$23.75**
10CX50	10 in.	25-22,000	20 watts	**$36.00**
12TX50	12 in.	18-22,000	25 watts	**$62.50**
Single Cone "Free Edge" type:				
5A50	5 in.	50-15,000	8 watts	**$15.00**
Professional Series:				
H50 Horn Tweet.		2,000-20,000	15 watts	**$11.10**
6M50 6½" Sp'ker		200-6,000	25 watts	**$21.00**
8L50 8 in. Woofer		37-4,000	15 watts	**$28.25**
10L50 10 in. Woofer		25-3,000	20 watts	**$41.00**
12L50 12 in. Woofer		17-2,500	30 watts	**$64.00**

Please Note.—A7 and A9 types are available in either 8 or 16 ohm Voice Coil. A50, CX50, TX50 and Professional types, 16 ohms only.

WIDE RANGE TWIN CONE LOUDSPEAKERS

5 in. Tweeter, 4,000-18,000 c/s, 15 watts r.m.s., 15 ohm V.C. **$4.30**

8 in. Twin Cone, 40-12,000 c/s, 2, 8, 16 ohms V.C., 8 watts r.m.s., 16 watts peak power handling **$7.50**

Twin Cone, Elliptical, 85-10,000 c/s, 5 watts r.m.s., 9 in. x 6 in., 7 watts peak power, 3.5 or 15 ohm V.C. impedance **$6.55**

12 in. T.C., 45-10,000 c/s, 8 watts r.m.s, 10 watts peak, 2, 8 or 15 ohm V.C. impedance **$9.80**

12 in. T.C., 30-14,000 c/s (in recommended enclosure), 8 or 16 ohm V.C., 20 watts r.m.s., 30 watts peak power **$41.80**

S.W.R. METERS Model KSW-10

Specifications.—Standing Wave Ratio: 1:1 to 1:10. Accuracies: Plus or minus 3% scale length. Impedance: 52 ohms and 75 ohms. Meter: 0-100 DC microamperes. **Price $19** inc. tax.

ALARM BELLS

(Parachute type), 6 volt. Suitable or Burglar Alarms, etc., complete with trip rope, etc. **Price $1.25**, post 50c.

HAM RADIO SUPPLIERS

5A MELVILLE ST., HAWTHORN, VIC. Phone 86-6465

323 ELIZABETH ST., MELBOURNE, VIC. Phone 67-4286

North Balwyn tram passes corner of Melville St. **Mail Orders to City Branch: 323 Elizabeth St., Melb., Vic., 3000**

We sell and recommend Leader Test Equipment, Pioneer Stereo Equipment and Speakers, Hitachi Radio Valves and Transistor Radios, Kew Brand Meters, A. & R. Transformers and Transistor Power Supplies, Ducon Condensers, Welwyn Resistors, etc.

"AMATEUR RADIO"

JOURNAL OF THE WIRELESS INSTITUTE OF AUSTRALIA FOUNDED 1910

DECEMBER 1967
Vol. 35, No. 12

Editor:
K. E. PINCOTT VK3AFJ

Assistant Editor:
E. C. Manifold VK3EM

Publications Committee:
G. W. Baty (Secretary) VK3AOM
A. W. Chandler (Circulation) VK3LC
K. M. Cocking VK3ZFQ
Ken Gillespie VK3GK
W. E. J. Roper VK3ARZ

Draughtsmen:—
Clem Allan VK3ZIV
Ian Smith .... 36 Green St., Noble Park

Advertising Enquiries:
C/o. P.O. Box 36, East Melbourne, Vic., 3002.
or
Mrs. BELLAIRS, Phone 41-3535, 478 Victoria Parade, East Melbourne, Vic., 3002. Hours: 10 a.m. to 3 p.m. only.

Publishers:
VICTORIAN DIVISION W.I.A.
Reg. Office: 478 Victoria Parade, East Melbourne, Vic., 3002.

Printers:
"RICHMOND CHRONICLE," Phone 42-2419.
Shakespeare Street, Richmond, Vic., 3121.

★

All matters pertaining to "A.R.," other than subscriptions, should be addressed to:

THE EDITOR,
"AMATEUR RADIO,"
P.O. BOX 36,
EAST MELBOURNE, VIC., 3002.

Acknowledgments will be sent following the Committee meeting on the second Monday of each month. All Sub-Editors should forward their articles to reach "A.R." **before the 5th of each month.** Any item received after the Committee meeting will be held over until the next month. Publication of any item is dependent upon space availability, but in general about two months may elapse before a technical article is published after consideration by the Publications Committee.

★

Members of the W.I.A. should refer all enquiries regarding delivery of "A.R." direct to their Divisional Secretary and not to "A.R." direct. Non-members of the W.I.A. should write to the Victorian Division, C/o. P.O. Box 36, East Melbourne. Two months' notice is required before a change of mailing address can be effected. Readers should note that any change in the address of their transmitting station must, by P.M.G. regulation, be notified to the P.M.G. in the State of residence; in addition, "A.R." should also be notified. A convenient form is provided in the "Call Book".

★

Direct subscription rate is $3.00 a year, post paid, in advance. Issued monthly on first of the month. February edition excepted.

CONTENTS

Page

Technical Articles:—
- A Printed Circuit Transistorised S.s.b. Generator 9
- Converting A.W.A. Low-Band Carphones for 6-Metre Operation 3
- Errata: VK3 V.h.f. Converter 20
- Modification of BM3 Mike for Switch-to-Talk Operation 8
- More Transistor Sideband 5
- Rhombics and Chaos 11
- Transistorised 2-Metre F.M. Transmitter 13

W.I.A. Federal Executive:—
- Federal Comment:
  - Federal Organisation of W.I.A. 2
  - I.A.R.C. Annual Convention 2
- Region III. and South-East Asia 21

General:—
- A.R.R.L. Technical Merit Award 17
- Book Review:
  - "The World of Mr. Sheraton" 8
  - "World at Their Finger-Tips" 8
- Index to Volume 35—1967 28
- New Call Signs 14
- Obituary 23
- Prediction Charts for December 1967 10
- W.I.A. D.X.C.C. 19
- Worked All Victorian National Parks Award 17
- Worked From All Victorian National Parks Award 17

Contests:—
- Contest Calendar 19
- John Moyle Memorial National Field Day Contest, 1968 15

Notes:—
- DX 19
- Federal and Divisional Monthly News Reports 21
- SWL 18
- VHF 20
- Youth Radio Scheme 10

W.I.A. OFFICIAL BROADCASTS

NEW SOUTH WALES

VK2WI, Sundays, at 1100 hrs. E.A.S.T.

3595 Kc. a.m.	145.130 Mc. a.m.
7146 Kc. a.m.	146.000 Mc. f.m.
53.866 Mc. a.m.	(53.950 Mc. f.m. proposed shortly)

VICTORIA

VK3WI, Sundays, at 1030 hrs E.A.S.T.

1825 Kc. a.m.	144.500 Mc. a.m.
3600 Kc. s.s.b.	145.854 Mc. f.m.
7146 Kc. a.m.	432.500 Mc. a.m.
53.032 Mc. a.m.	

QUEENSLAND

VK4WI, Sundays, at 0900 hrs. E.A.S.T.

3580 Kc.	53.995 Mc.
7146 Kc.	144.36 Mc.
14.342 Mc.	

SOUTH AUSTRALIA

VK5WI, Sundays, at 0900 hrs. C.A.S.T.
3.5, 14, 52 and 144 Mc. bands.

WESTERN AUSTRALIA

VK6WI, Sundays,

TASMANIA

VK7WI, Sundays, at 1000 hrs. E.A.S.T.
3672 Kc., and re-transmitted by representative stations on—

7146 Kc.	144.1 Mc.
53.032 Mc.	432.6 Mc.

FEDERAL COMMENT:

FEDERAL ORGANISATION OF W.I.A.

Last month a series of news items appeared on Divisional broadcasts and in "A.R." which referred to Federal matters. What is the Federal set-up of the W.I.A.? Broadly speaking, the situation under the existing constitution is this. Each Division appoints a Federal Councillor, who represents that Division's views at the annual Federal Convention of the W.I.A., held over Easter. At this Convention, W.I.A. policy for the coming year is determined, by all Divisions exercising one vote each, and voting on motions which had been submitted prior to the Convention. These motions having been previously discussed by all Divisions at Council meetings and general meetings, the Federal Councillor carries to the Convention his Division's voting instructions and exercises a vote on behalf of his Division. If there is a simple majority of votes in favour, then the motion is passed and becomes part of Institute policy. However, minutes of the Convention are prepared and circulated to all Divisions after the Convention and the vote of their Federal Councillor is ratified by each Division. It is becoming common procedure for Divisions to instruct their Federal Councillor to vote "at his discretion," and later ratify that vote. This allows for an open exchange of views between delegates, and allows the Federal Councillors to change their views on any matters, having listened to the points of view expressed by other States.

Following the Convention, the task of implementing W.I.A. policy falls to Federal Executive. This body consists of seven voting members, and several co-opted officers. It has been traditional for the personnel of Executive to be appointed from the Headquarters Division—that is the Division in which the Central Office of the Postmaster-General's Department is situated. This has been Victoria for some time, and thus the Divisional Council of the Victorian Division appoints Executive each year. These appointments are circulated to the Divisions for acceptance, and nominations are made to the offices of President, Secretary, etc.

What tasks do the members of Executive undertake? Generally these can be summed up in the three words **representation**, **liaison** and **administration**. Executive **represents** the whole Australian Amateur Service to outside bodies; especially to the regulatory bodies—the P.M.G's Dept., the I.T.U., etc. This representation is also often on behalf of a particular State, or an individual Amateur. The **liaison** undertaken is between the six States, and also between overseas Amateur Societies, the I.A.R.U., etc. **Administration** concerns Executive in the fields of contests, awards, QSL, SWL, YRS, etc., much of this activity being undertaken by co-opted officers.

All these activities are financed through the "per-capita" payments made each year to Executive by Divisions. Each Division contributes a lump sum based on total membership at the rate of 30 cents a head. This payment gives financial standing to a Division at the annual Convention and allows its vote to be exercised. In addition to this money, there is the I.T.U. Fund. This is in the nature of a trust fund for the sole purpose of sending a representative to a conference of the I.T.U. which may be discussing Amateur frequency allocations.

One implication of all this is that if you, the individual member of W.I.A., feel that you have some aspect which is causing concern, then send details to your Federal Councillor. These will be discussed and a Federal Convention motion drafted, circulated to all Divisions, and eventually discussed and voted on in Sydney next Easter. This is the time of year for submitting items for the Federal Convention. Do you have any? (Practically all items submitted to the Hobart Convention this year have been dealt with by Executive, and we will be giving details in forthcoming news releases.)

I.A.R.C. ANNUAL CONVENTION

The convention of the International Amateur Radio Club was held in Geneva over the week-end of 23rd and 24th September this year. Some details of events there have been received by Executive, both directly from I.A.R.C. and from the I.A.R.U. Region I. Committee. A word of explanation; there are at least **two** important International Amateur Radio organisations with which Amateurs should be concerned.

Firstly, the I.A.R.U., which is an international organisation of **Amateur Societies**, with its present headquarters with A.R.R.L. in the U.S.A.

Secondly, the I.A.R.C., which is an international organisation of **individual Amateurs**, with its headquarters in Geneva, Switzerland, and with the well known Amateur Station 4U1ITU.

Both these organisations have as an ultimate aim the encouragement, maintenance and preservation of Amateur Radio, but they go about this in different ways. I.A.R.U. and I.A.R.C. are **not** in competition, members of I.A.R.C. are office-bearers in I.A.R.U. regional organisations, and also office-bearers in national societies such as A.R.R.L., R.S.G.B., W.I.A., etc. Hence the liaison between I.A.R.U. organisations and I.A.R.C. is obtained in this personal manner, as well as on a formal level as between I.A.R.C. and I.A.R.U. member societies. (As a member of W.I.A. you have a connection with I.A.R.U. because W.I.A. is a member country of the Union, however you can join I.A.R.C. as an individual Amateur for the fee equivalent to $US5 (I.A.R.C., Box 6, CH-1211, Geneva 20, Switzerland), just as members of Federal Executive and Federal Councillors have joined as individuals.)

I.A.R.U. states as part of its objectives, ". . . the effecting of co-operative agreements between national Amateur Societies . . . on matters of common welfare." The President of I.A.R.C. has been quoted as saying, "I again wish to state emphatically and clearly, that we have always opposed any attempt to compete with national organisations or the I.A.R.U. The I.A.R.C. is not an instrument to perform duties which are incumbent upon those institutions. We see our aims in doing something for our hobby which can be done more easily by us than the I.A.R.U. We are at a somewhat different level, but have exactly the same feeling for the development of Amateur Radio as all national associations and their co-ordinating bodies have."

The I.A.R.C., being located in Geneva, has a unique opportunity to liaise with the officials of I.T.U., and with delegates to I.T.U. conferences. In fact, as stated in last month's "A.R.," the World Maritime Mobile Conference has been held in Geneva this year, and the Secretary-General of I.T.U. (M. Mohamed Mili) held a reception for the heads of delegations and invited representatives of the Amateur Service. M. Mili has consented to become Patron of the I.A.R.C. and he attended the opening of their Annual Congress, at which he delivered an address. His concluding comments are worthy of note:

". . . Your movement is therefore a magnificent one which brings men closer together—a movement which, in addition to its contribution to scientific progress, . . . fosters the fraternalism which is the very basis for the maintenance of peace.

"Yesterday I happened to read an article written by one of you, Mr. Peter Schroder. It was written in 1957—just ten years ago—and published in the I.T.U. Telecommunication Journal in January 1958. In that article, Mr. Schroder attempts to define the aims of the Amateur Radio movement and in conclusion, I cannot do better than repeat two sentences at the end of the article which, in my opinion, provide a perfect definition of your movement. This is what the author said: 'One of the most significant aspects of the I.A.R.U. lies in its role as a force for world peace and understanding. It has already been noted that the furthering of international fraternalism was a stated objective of the Union, and to this aim it has consistently adhered since the organisation was first devised a quarter of a century ago.' (Continued on Page 13)

CONVERTING A.W.A. LOW-BAND CARPHONES FOR 6-METRE OPERATION*

JOHN BECKETT, VK3FE

OVER the past few years many Hams have acquired one of the A.W.A. low-band f.m. units with a view to converting it to 6 metres. The author has converted several of each type of unit and presents here some ideas for the guidance of those who wish to get going on 6 f.m.

There are three basic types of units which have been released on the surplus market. The older, two-chassis unit we will refer to as the "20" (20 watts of r.f.), the smaller type 10A (10 watts of r.f.), and the Junior (nominally 3 watts out). The receivers in the 10A and Junior are identical.

In commercial service these sets all used a two point something megacycle crystal which, when multiplied by 36, gave an output around 78 Mc. For Amateur use, we employ a similar crystal multiplied by 24 and change the last tripler to a doubler for output on 52 Mc.

The conversion is very simple on the two smaller units and moderately so on the 20, where we alter the muting and oscillator chain to the later type.

RECEIVER CONVERSION

R1, all sets: Remove from the receiver the following components—aerial coil, r.f. plate coil†, 1st mixer grid coil, multiplier plate coil, and the multiplier injection coil†. (Coils marked † are not used in the 20).

In the 20 the coils are bolted in and use brass mounting blocks and copper slugs. Solder the new coils onto these blocks and retain these slugs. Winding the copper slugs in **raises** the frequency.

In all sets wind up new coils according to Table 1 and solder into place. Do not attempt to close-couple the r.f. plate to mixer grid coils in the Junior and 10A as you will only increase the risk of spurious signals entering the i.f. strip.

	20	10A and Junior
Aerial	9½ turns tapped at 2t.	18 turns tapped at 3t.
RF Plate	not used	17 turns
Mixer Grid	8½ turns	16 turns
Mult. Plate	10 turns	20 turns
Inject. Coil	not used	20 turns

Table 1.—Receiver Coil Dimensions.

Note: All coils are close wound. The 20's are ½" i.d. and wound with 16 B. & S. The 10A and Junior are ¼" i.d. and wound with 20 B. & S. All are self supporting.

On the 20, replace the DC11 crystal socket with a D type.

It is strongly urged that you alter the 20's oscillator chain to the later type although it is simpler to use an overtone crystal in the existing circuit. This precludes multi-channel operation however.

R2: Alter the muting circuit of the 20 to the specifications shown in Fig. 1. Remove all components associated with the 6SN7 stage except the heater wiring. Replace the 6SN7 with a 6SL7. Remove the VR tube and associated wiring. The muting level pot. can be preset and an additional muting control incorporated in the control unit.

This new circuit is very similar to the 10A electrically.

R3, I.f. alignment: Before tackling this most important step, it is suggested that the following steps be taken.

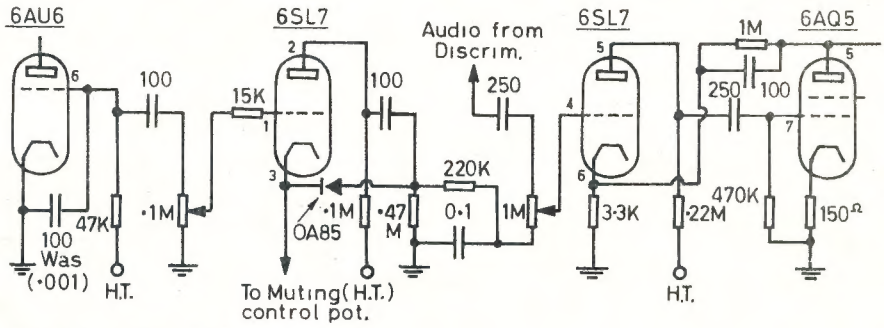

FIG.1. MUTING CIRCUIT FOR "20".

Check all valves and replace any which are doubtful; should the 6AK5 r.f. amp. be down, replace it with a M8100 (premium 6AK5, available from Mullard for about $2.80).

Clean any dust or grime from the set.

Apply a little acetone on a match stick to soften the sealing lacquer on the i.f. slugs, and after checking the h.t. rail for shorts, prepare to fire up the receiver.

The alignment is simple, but you **must** follow the instructions. Into the grid of the 2nd mixer (6AU6) feed a signal from a generator, preferably controlled at precisely 2 megacycles. Adjust the generator output so that a 0-1 mA. meter plugged into the "1st Lim." socket shows about 200 uA.

On the 20, you simply adjust all the i.f. transformers down the line to the 1st limiter for maximum meter reading.

For the 10A and Junior, the process is identical **except** that you **must** damp the winding of the transformer you are not tuning with a 4.7K resistor. In other words, when you tune the primary (bottom slug) you damp the secondary (top slug).

Having gone along the i.f. strip once, go over it again using the lowest input from the generator which will give an indication on the 1st limiter meter.

Transfer the meter to the 2nd limiter socket and with the generator advanced just enough to cause the meter to read up-scale, tune the 2nd limiter slug (there is only one—on the top of the can). This is a single wound coil.

R4, now for the **discriminator**: Wind the generator up to a healthy output so that the 1st limiter current is about 500 uA. Place a 25-0-25 uA. meter in the discriminator socket (marked "Disc."). If you haven't such a meter, use a v.t.v.m. on the 1½ volt range with the "hot" lead of the meter to the "hot" lead of the discriminator. If you have not a v.t.v.m. either, use a multimeter on the 60 uA. range and squint hopefully at the zero mark.

Whatever method you use, you will probably find that the meter does not read zero. Screw the top slug of the discriminator coil in and out and observe the meter pass through zero and back. Now with the needle a little to one side of zero, adjust the bottom slug of the discriminator for maximum deflection **away** from zero. Then adjust the top slug for exactly zero. Disconnect the generator.

This completes the i.f. alignment which can be carried out quicker than you can read this!

R5: Here is an option for owners of the 20. You can simply plug in a crystal on 16841.3 Kc., tune up the oscillator coil and the new multiplier coil and you are in business. However, should you later wish to go multi-channel, this crystal will be unsuitable.

You must now decide whether to convert the set to the 10A oscillator chain as shown in Fig. 2.

To set up the oscillator chain on the 10A and Junior, plug a 0-1 mA. meter into the socket labelled "Trip. Ig" and tune the two top cores of the oscillator coils for maximum. Then tune the bottom of the 1st oscillator coil for minimum—a very tiny dip, so watch the meter closely. There is no bottom slug in the second coil.

* Eastern and Mountain District Radio Club's "The Radio Bulletin," C/o. The Editor, P.O. Box 33, Olinda, Vic., 3788.

With an absorption wavemeter tune the first air-spaced coil to maximum output (about 30 Mc.). Ignore the multiplier injection coil until you are receiving signals.

R6, high i.f. alignment: With a 0-1 mA. meter in the 2nd limiter socket, adjust the top and bottom slugs of the first i.f. (20 Mc.) transformer for maximum. This is adjusted on the noise level from the front end r.f. noise, **not** audio noise from the speaker (see R9 comment on noise).

R7, Front End Alignment: With a 6 metre aerial connected, adjust front end coils for maximum 1st limiter reading on a weak signal. If no signal available, adjust on aerial noise as shown in 1st limiter meter reading.

At this stage you can adjust the multiplier injection coil for maximum 1st limiter reading. You should now be receiving signals and you can repeat R6 and R7 for maximum 1st limiter readings.

Finally, on a weak signal adjust by ear for best signal-to-noise ratio the oscillator injection coil. You should now have a standing 1st limiter current of 80-100 uA. without signal. The Junior and 10A 1st limiters "saturate" at about 900 uA. The 20 saturates at about 500 uA.

R8, Frequency Adjustment: With a strong signal known to be on frequency, adjust the receiver crystal trimmer to give centre zero at the disc. socket. On the 20, unless you have converted the oscillator chain, you must re-adjust the discriminator top slug for centre zero. On the 10A and the Junior **do not** alter the discriminator top slug after stage R4—the adjustment **must** be made on the crystal oscillator trimmer.

R9, Some Comments: If you cannot hear signals you can use the early stages of the transmitter as a signal injector by operating the transmit oscillator and a couple of multipliers. You will have to dig into the h.t. circuitry to do this. A g.d.o. or signal generator can be useful, but do not use too much signal as the set may be tuned to a spurious quite easily. The spurious response is way down on a correctly aligned set.

It is not unusual for a receiver to "take off" with the aerial not connected. Therefore make sure you have an aerial on the set when you are tuning up.

In A.W.A. equipment, the **top** slug is the secondary and the **bottom** slug is the primary.

Check that the front end trimmers are not shorting.

Check that the antenna relay is clean and making good contact.

Noise: In f.m. work "noise" refers to an up-scale reading on a limiter meter. The more "noise" in the i.f. strip, the **less** "noise" in the speaker (more or less). You can **not** tune an f.m. set by ear (or to be more precise, I can't).

The receiver should now be going like a beauty.

TRANSMITTER CONVERSION

T1: Let's start with the easiest first —the 10A. From the plate of the second last 6AQ5 to B+ add a 18 pF. mica. Across the grid of the last 6AQ5 (driver) coil add 12 pF. Across the plate coil of the driver add 12 pF. Across the grid coil of the p.a. add 20 pF. If you are unlucky, you may have to add 1 turn to the p.a. plate coil. That's all! **But** as there appears to be variation in the original coils, check the frequencies with a g.d.o. or wavemeter.

Now for the 20. Remove transformer V84 (grid of 6AQ5 driver) and rewind with 13 turns of 16 B. & S. Change plate coil of this stage to 12 turns of 16 B. & S., tapped at 2 turns, and retaining the original copper slug and base plate. This coil is ½" i.d. The grid coil for the p.p. 2E26s becomes 9 turns centre tapped 14 B. & S. close wound ⅝" i.d. The p.a. tank is altered to 6 + 6 turns 14 B. & S. spaced approx. 1 wire diameter with an 11/16 inch gap in the middle to take the link. The only other changes are to alter the DC11 crystal socket to a "D" type, and replace the screen to ground capacitor in the 6AU6 oscillator from a 10 pF. to 68 pF. Also add 15 pF. across the frequency set trimmer.

For the Junior with 6J6 final. Change the grid coil of V22 to 30 turns of 20 B. & S. ¼" i.d. close wound self supporting (26 Mc.). Change the plate coil of V22 to 11 turns of 16 S.W.G. ⅜" i.d. close wound (52 Mc.). Change the grid coil of the 6J6 to 11 turns centre tapped close wound 16 S.W.G. ⅜" i.d. wound in the same sense as the previous coil. The p.a. plate coil becomes 7 + 7 turns 16 S.W.G. close wound ⅜" i.d. with small gap at centre for the link. Wind in opposite sense to grid coil.

T2, Tuning Up: Plug a 2188.54 Kc. "D" type crystal into the set. Plug tuning meter into successive sockets and tune for maximum (or dip in the case of the two plate metering points). In those units where slugs are provided in the phasing coils **never alter them.** In the 10A and 20, the phasing coils are the first two coils in the rig and have slugs only on the underside. In the Junior adjustments are not provided anyway.

T3, Frequency Adjustment: The whole set should now be working well and can be set on frequency by checking with another station whose receiver is known to be correct. Simply adjust the transmitter frequency set trimmer to read centre zero on his discriminator.

T4, Power: As these sets are now running on 2/3 of their designed frequency, it follows that the rated output can be reached with less drive. The whole matter of preventing t.v.i. on 6 metres rests with using sensible power and a minimum of drive to the final. In all rigs, 1 mA. drive to the final is adequate. However, all stages must be peak tuned so lower the drive by lowering the screen resistors along the multipliers if t.v.i. is a problem.

T5, Deviation Set: The several experts on the air will tell you if the control needs resetting. Make sure that your frequency and his frequency are correct before altering.

T6, Neutralising the 6J6: With the set tuned up and the grid current meter in place, pull out the transmitter crystal. The grid current should drop to zero. If it does not, adjust the neutralising trimmers until it does. Replace the crystal before calling CQ!

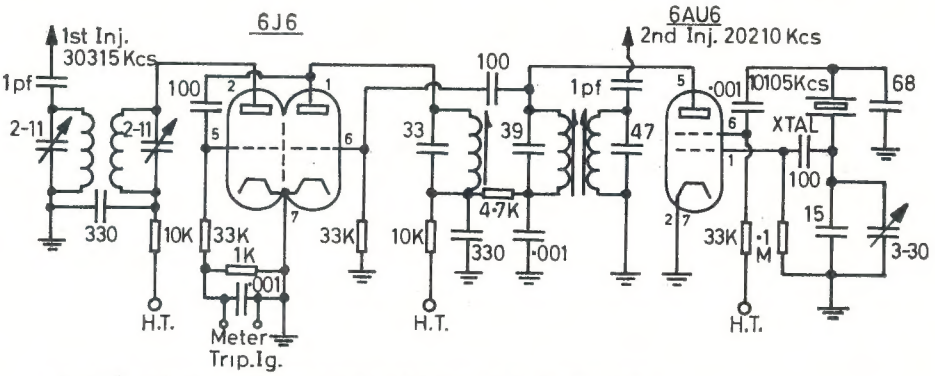

FIG. 2. MR-10A. OSCILLATOR-MULTIPLIER CIRCUITS.

POWER SUPPLIES

The 10A and Junior operate happily from their vibrator supplies. The 20 has very onerous power requirements if operated from a battery and most of us run it as an a.c. powered base. In the interests of t.v.i. run only about 240v. d.c. on the transmitter. This is easily gained from a t.v. power transformer. The 10A will also work well from a similar supply.

All the receivers run on 150 volts h.t. The transmitters require —30v. of bias. Heaters can be 6 or 12 volts by altering the heater chain connections. But remember, low power means minimum t.v.i.

PLUGS AND SOCKETS

10A Set:

Pin 1—Tx filaments.
,, 2—Rx filaments.
,, 3—Negative.
,, 4—Mute.
,, 5—Speaker.
,, 6—Speaker.
,, 7—Bias.
,, 8—PTT relay.
,, 9—Trans. HT.
,, 10—Rec. HT.
,, 11—Mic. active.
,, 12—Mic. return.

(Continued on Page 13)

MORE TRANSISTOR SIDEBAND

COL HARVEY, VK1AU*

WHILST the circuits published in "A.R." Feb. 1967 worked well enough, further fiddling produced some improvements which are worth considering for any similar project.

MIXING

Because the conventional transistor mixer was somewhat critical in respect of injection voltage, and produced an undesirably large amount of the injection frequency in the collector load, many alternative types of mixer were tried. The simple double diode mixer, rejected initially, because it looked too simple to be effective, when tried, turned out to be the equal of any transistor mixer which had preceded it! It was also cheaper, smaller and easier to install. The revised circuit appears at Fig. 1.

INSTABILITY

In the case of VK1AU's exciter, the extra output from the latest mixer board (Fig. 1) caused some minor difficulties with regeneration, which became noticeable when the linear amplifier was in use. The classical cures of resistance damping, and/or neutralisation were unattractive due to the adverse effect on the r.f. drive level to the linear, and mechanical difficulties. Fortunately, there is a solution, so simple that it shouldn't work—but it does.

Again, a miniature pot. allows the modification to be done on the original matrix board. This method provides better flexibility than that provided by a fixed resistance in series with a by-pass capacitance—Fig. 3b.

Slight regeneration can be hard to identify. Large amounts will always appear as unsuppressible carrier, accompanied by sluggish action of the linear plate mA. meter.

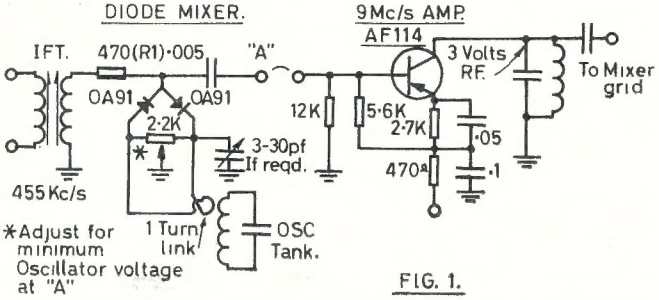

FIG. 1.

If R1 is removed, gain and distortion rise, therefore choose a compromise value. About ½ volt r.f. is all that is needed across the balance potentiometer, and 1 volt across the i.f. transformer secondary. Too much oscillator r.f. may prevent balance. Note that the emitter resistor should be 2.2K and not 2.7K as shown. Also the supply voltage is 12v.

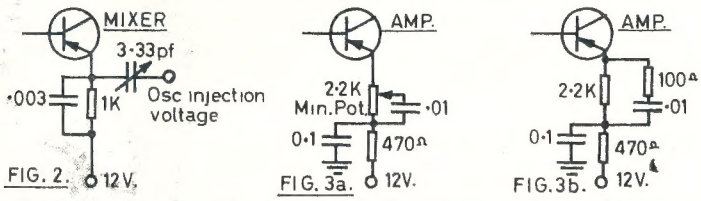

FIG. 2. FIG. 3a. FIG. 3b.

Notation for Fig. 2.—Although the 0.003 uF. by-pass capacitor would appear to shunt the injection voltage to ground, VK1AS reports increased conversion gain, and a need for considerably less injection voltage.

Fig. 3a.—By adjusting the emitter resistor slider upwards, the stage gain can be increased to the level desired, or to a point which just precedes regeneration!

The original mixer transistor has become a 9 Mc. amplifier which (with full carrier) now provides about 3 volts of r.f. at the collector. By using a miniature 1K pot. in the mixer, it was easy to mount the diode mixer and its amplifier in the space previously occupied by the transistor mixer alone.

VK1AS experimented along similar lines in his transmitter and reached the same conclusion. But later, in developing his receiver mixer, he found the circuit at Fig. 2 advantageous.

For those using conventional emitter injection mixers, it may be worthwhile to try varying amounts of emitter by-pass capacity, before deciding upon Fig. 1.

The effects of regeneration can best be seen on an oscilloscope. If the time base frequency is first chosen so as to display an easily identifiable audio pattern, regeneration will be seen as a "blurring" of the r.f. pattern, generally accompanied by a rise in amplitude of the pattern immediately adjacent to and along the horizontal time base. Close examination suggests that this is carrier re-insertion due (and proportional) to modulation.

When the carrier is sufficiently suppressed and regeneration is absent, the r.f. pattern on the c.r.o. looks just like a normal audio pattern, i.e. crisp and "spiky" with no residual thickening of the time base on speech peaks.

Up to ¼" of flattening of peaks (on a 5" c.r.o.) seems to be unnoticed in listening tests on the wanted sideband. However, excessive flat-topping is best recognised by the increase in monkey-chatter (i.e. distortion products) appearing on the unwanted sideband as the amount of flat-topping is increased. For this reason alone, it is best to adjust stage-gains (and audio and r.f. peak limiters) so as to avoid more than a small amount of visible flat-topping. So far as residual carrier is concerned, listener reports remain favourable unless the c.r.o. time base shows more than a thickening of about ¼".

V.F.O.

Since the original exciter was submitted, a transistor 1.7 Mc. v.f.o. has been added, based on the "Electronics Australia" circuit of Jan. '67. Intending constructors can be confident of plenty of output, with stability to match.

Worthwhile alterations are the mounting of the v.f.o. transistor in a heat sink—a ½" square aluminium rod bolted to the matrix board, with a transverse ¼" hole, into which the transistor case of the AF114 "plugs", thus eliminating mechanical and thermal instability. The other alteration is a series trap in the v.f.o. amplifier collector circuit to reduce a troublesome v.f.o. fourth harmonic, which (by bad choice of frequencies) fell on the high end of the 7 Mc. band and appeared as carrier which could not be fully suppressed.

If it is desired to use PNP transistors such as the AF114 as I did, rather than the NPN BA102 and BC108s specified in "Electronics Australia," simply reverse the power supply polarity (e.g. by use of a separate battery).

POWER SUPPLY

Initially, the exciter was run from a so-called voltage "doubler' supply, fed from a 6.3 volt filament winding (Fig. 4). A surprising amount of capacitance was needed to remove ripple from a voltage doubler supply. In my case, 1,500 uF. was barely enough.

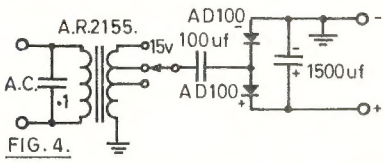

FIG. 4.

Again the effect shows well on the c.r.o., which displays a definite 100 c.p.s. component superimposed on the residual carrier. This shows as a thickening of the time base, or at low sweep speeds, as an unsynchronised and distorted wave form drifting along the time base, which cannot be eliminated by operation of the carrier balance controls.

At low current drain, voltage doubling (and almost tripling) does indeed take place. However, on heavier loads

* 16 Leane Street, Hughes, A.C.T., 2605.

BRIGHT STAR CRYSTALS

FOR ACCURACY, STABILITY, ACTIVITY AND OUTPUT

Our Crystals cover all types and frequencies in common use and include overtone, plated and vacuum mounted. Holders include the following: DC11, FT243, HC-6U, CRA, B7G, Octal, HC-18U.

THE FOLLOWING FISHING-BOAT FREQUENCIES ARE AVAILABLE IN FT243 HOLDERS:

6280, 4095, 4535, 2760, 2524 Kc.

5,500 Kc. T.V. Sweep Generator Crystals, $7.25; 100 Kc. and 1000 Kc. Frequency Standard, $17; plus Sales Tax.

Immediate delivery on all above types.

AUDIO AND ULTRASONIC CRYSTALS—Prices on application.

455 Kc. Filter Crystals, vacuum mounted, $13 each plus Sales Tax.

ALSO AMATEUR TYPE CRYSTALS — 3.5 Mc. AND 7 Mc. BAND.

Commercial—0.02% $7.25, 0.01% $7.55, plus Sales Tax.
Amateur—from $6 each, plus Sales Tax.
Regrinds—Amateur $3, Commercial $3.75.

CRYSTALS FOR TAXI AND BUSH FIRE SETS ALSO AVAILABLE.

We would be happy to advise and quote you.

New Zealand Representatives: Messrs. Carrel & Carell, Box 2102, Auckland.
Contractors to Federal and State Government Departments.

BRIGHT STAR RADIO

LOT 6, EILEEN ROAD, CLAYTON, VIC. **Phone 546-5076**

With the co-operation of our overseas associates our crystal manufacturing methods are the latest.

SSB EQUIPMENT

TYPE "F" SSB EXCITER, circuit board with crystal filter, mic. amp., etc., completely assembled, inc. valves **$49**
FV-50 VFO, for use with "F" Exciter, FL-50 and FT-50 .... **$49**
FF-30DX, 3-section L.P. filter, **$18.50**
K-109 SWR METER **$20**
FR-50 RECEIVER, dual conversion, 80-10 mx **$225**
FL-50 TRANSMITTER, lowest cost 5-band SSB rig **$225**
FR-100B RECEIVER, dual conversion, c.c. front end, 80-10 mx **$399**
FL-200B TRANSMITTER, mechanical filter, 240w. p.e.p., 5 bands, **$478**
FL-2000 LINEAR AMPLIFIER .. **$298**
FT-50 TRANSCEIVER, new, 60w. p.e.p., 5 bands **$380**
FT-100B TRANSCEIVER, revolutionary ultra-modern design, transistorised for low current drain and reliability, 120w. p.e.p. **$620**

Also matching speakers, p.t.t. mics., co-ax connectors, etc.

All prices Amateur Nett, incl. S.T. Freight extra.

Bail Electronic Services

60 SHANNON STREET,
BOX HILL NORTH, VIC., 3129
Phone 89-2213

Rep. for N.E. N.S.W.:
MOSMAN RADIO SERVICES
P.O. Box 198, Tamworth, N.S.W.

DYNAMIC MICROPHONE & STAND

★ LOW PROFILE ★ COMPACT ★ STABLE

SPECIFICATIONS:

Impedance: 50 ohms, 50K ohms
Frequency Range: 80 to 12 Kc.
Output: —55 db. (0 db. = 1V./dyne Cm2)
Switch: D.P.D.T. P. to T.
Housing: Angle adjustable

TYPE 45

ROBUST BASE STATION P.A. MICROPHONE

ZEPHYR PRODUCTS PTY. LTD.

70 BATESFORD ROAD, CHADSTONE, VIC., 3148 **Phone 56-7231**

Manufacturers of Radio and Electrical Equipment and Components

W.A.— S.A.— Tas.— N.S.W.— Qld.—
Agents: D. K. Northover & Co.; Neil Muller Ltd.; Homecrafts (Tas.) P/L.; Jacoby, Mitchell & Co. P/L.; T. H. Martin P/L.

the output voltage drops sharply, the exciter described reducing the output voltage to less than 8 volts. The status quo can be restored by increasing the a.c. input, and in my case, 9 volts a.c. in, gives 12 volts d.c. out, providing the load remains connected. Note that with this input, the output voltage will rise to about 22 volts with a light load, so care needs to be taken not to accidentally disconnect individual matrix boards (particularly those using OC44s for example) whilst the power is on. One can protect such boards with a 12 volt zener, but this is rather expensive.

The inherent danger in using a power supply with such poor regulation, prompted some experiments with regulated supplies. Surprisingly, none of the simple circuits tried, did better than about 5% regulation, and all suffered from loss of control at the high voltage end of the operating range, fortunately, not to the extent demonstrated by the doubler circuit. The circuit now in use is shown at Fig. 5.

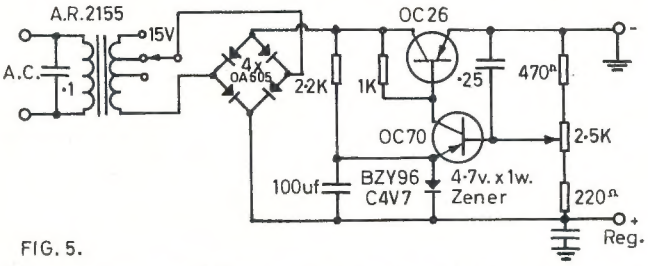

FIG. 5.

If a zener is not available, use 3 or 4 volts of battery voltage as a reference. A higher reference voltage prevents the control potentiometer selecting an output voltage less than the reference voltage. Note: The value of the capacitor from the regulated plus line to earth is 500 uF.

Because at low output voltages, the series regulator must dissipate the difference between input and output requirements, an input voltage should be selected which is not unnecessarily high for the intended application, e.g. use of 21 volts rectified d.c. input for long periods, for 4 volts regulated out, will (at 300 mA.) produce quite serious heating in both the regulator and control transistors, and if a 400 mW. zener (such as the BZY88/C4V7) is used, probably destroy it. The values given in Fig. 5 result in cool operation at 12 volts output, and neither transistor requires a heat sink. A d.c. input voltage should be selected which allows the voltage control potentiometer to be set near mid-range.

The beta of the control transistor has a significant bearing on the upper limits of regulation, as Table 1 shows. At 12-14 volts regulated, the level of safety offered by either the OC70 or the OC72 is adaquate.

On-Load Voltage	Off-Load Voltage OC72	OC70
17	22	18.5
16	17	17
15	16	16
14	14.7	15
13	13.5	13.7
12	12.2	12.7
11	11.5	11.7
6	6.2	6.1

Table 1

TRANSISTOR SERVICEABILITY

There is an occasional need, in a transistorising project, to decide whether the circuit is inoperative for reasons other than use of a faulty transistor. Cases of oscillators which won't oscillate, or amplifiers which won't amplify inevitably cast a doubt in the serviceability of the transistor. Rough checks for inter-element shorts and amplification capability (beta) can be made with an ohm meter, but I found it more convenient to build up a simple transistor tester. The circuit at Fig. 6 allows approximate d.c. amplification (up to 150) to be checked, as well as leakage and shorts. It is also most instructive in demonstrating the avalanche effect of an ever increasing beta if the case of the germanium transistor under test is heated by the soldering iron! Regrettably, it does not follow in practice that stage gains can be doubled by prodding the iron on the transistor!

CONSTRUCTION

Transistor projects have a common factor with their valve counterparts, i.e. they also need breadboard techniques when first developing circuits. Rather than use matrix board from the beginning in permanent commercial fashion, it is recommended that tags—eyelets—lugs be used freely, and that pigtails be left long so that circuit changes can be made easily without mechanical or heat damage to components.

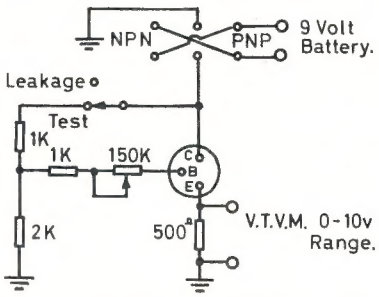

FIG. 6.—SIMPLE TRANSISTOR TESTER

Test Positions (R equals 0 ohms):

C-E Short	Reads	9v.
C-B	,,	9v.
B-E	,,	2v.
C Open	,,	2v.
B or E Open	,,	nil
Normal	,,	5½v.

Calibrate the potentiometer in multiples of 25K ohms, i.e. 25-50-75-100 (kilo ohms). Adjust until meter reads 2 volts d.c. Beta is approximately the number of kilo ohms of potentiometer in circuit, i.e. 50K equals Beta of 50. Beta will change with supply volts, but this is immaterial when the test is aimed at matching transistors or detecting gross deviations from normal amplification. Note that the spread of amplification factors, in production transistors, is quite broad.

This technique also makes it possible to change or check transistors quickly, and avoids the situation whereby removed components, including transistors, are made useless for later projects due to the shortness of the remaining pig-tails.

Only when stage gains and circuits have been proved satisfactory, is it wise to embark on permanent methods of construction, and only then if the constructor is prepared to abandon matrix board components in the event of subsequent component failure.

THE FUTURE

Fortunately for the future of Amateur Radio every project seems to lead naturally to another. Where, only a few months ago, transistorising the transmitter was the sole objective, exposure to the world of solid state devices has revealed a furher challenge which will be difficult to resist.

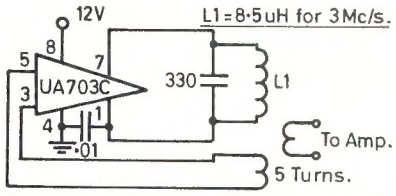

FIG. 7a. BASIC INTEGRATED CIRCUIT V.F.O.

A Fairchild Technical Bulletin (No. 5-1967) suggests that there will be advantages in re-working the i.f. strip and the oscillators so as to use integrated circuits such as the UA703C (which comprises 5 transistors and 2 resistors in an 8-lead TO5 case). "Due to such excellent limiting characteristics that a.g.c. is unnecessary even in very high gain i.f. amplifiers," it might even be possible for this device to operate as an automatic i.f. strip "compressor" (and possibly also as a transformerless balanced modulator).

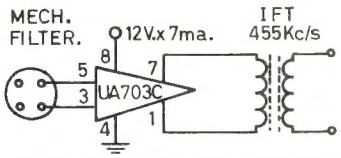

FIG.7b. AN INTEGRATED CIRCUIT I.F. STRIP.
(With 26 DB. Gain.)

The attraction can be seen well from Fig. 7a which shows a complete v.f.o., and from Fig. 7b which shows the next i.f. strip which will be tried at VK1AU.

Even at $4.10 a time, these integrated circuits seem to offer sufficient advantage in simplicity and size to warrant a few experiments. So, tidying up the present breadboard layout is once again a long-term objective.

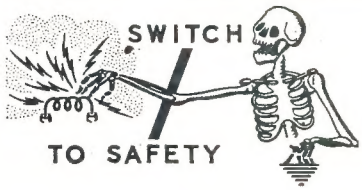

Book Review

"WORLD AT THEIR FINGER-TIPS"

By John Clarricots, past R.S.G.B. General Secretary, 1930-1963. This magnificent 300-page volume traces the history and growth of the R.S.G.B. and Amateur Radio in the U.K. since the turn of the century. It contains 31 chapters and more than 40 illustrations.

Pat Hawker, writing the "Introduction," comments: "No longer can we be sure that all newcomers to the hobby will hear firsthand reminiscences of the pioneers; more and more vital has it become for the records to be written into one continuous story."

John Clarricots does this admirably. Every discerning Ham, wishing to know what his hobby is all about, must have this one on his bookshelf.

Price: Paperback 12/-, de luxe 42/6 (Stg.). Available from R.S.G.B., 28 Little Russell Street, London, WC1.

"THE WORLD OF MR. SHERATON"

By Ern. Henderson, W1AUC/W1UDY. This is an amazing "Rags to Riches" autobiography, of one of our fraternity. This man, from the most humble beginnings, built himself a Motel and Hotel Empire in the U.S.A., to the value of 400 million dollars.

Humorous episodes vie with fascinating accounts of business ventures. Mr. Henderson, who became universally known as "Mr. Sheraton," devotes a thought-provoking chapter to his own personal philosophy of life. Many references are made to Amateur Radio throughout its pages. The author is an extremely good story-teller, and it is difficult to put this book down.

Price: Originally $4.50 (U.S.).

— • • • —

CHANGE OF MEETING PLACE

MOORABBIN AND DISTRICT RADIO CLUB

Editor "A.R.," Dear Sir,

As from Friday, 20th October, 1967, the Moorabbin and District Radio Club has been holding its meetings at the rooms of the Moorabbin Baseball Club in Summit Avenue, Moorabbin.

Summit Avenue is on the eastern side of Bluff Road, half a mile south of the intersection of Bluff Road and South Road.

Club meeting nights will continue to be the first and third Fridays of each month and, as always, non members are welcome.

For purposes of correspondence, the club's address will be:

4 Elizabeth Street,
East Brighton, Vic., 3187.

—Harold L. Hepburn, Hon. Sec.

"He's a Sideband Operator — hates all carriers!"

For Reliable Connections

OTL

RESIN CORE SOLDERS

O. T. LEMPRIERE & CO. LIMITED

Head Office: 31-41 Bowden Street, Alexandria, N.S.W. and at Melbourne, Brisbane, Adelaide, Perth, Newcastle

OTL/75

Modification of BM3 Mike for Switch-to-Talk Operation

GEOFF WILSON,* VK3AMK

The Japanese BM3 crystal microphone has been available for some years now at a reasonable price and has been quite popular. Having used one for four years on an a.m. rig, I decided to modify it for use with a s.s.b. transmitting using switch-to-talk.

As supplied, the BM3 has only the normal single-core shielded cable and a miniature screw type microphone plug and socket. The in-built switch simply shorts the insert to earth in the "off" position.

To convert to switch-to-talk the following method is used: Firstly, remove the switch retaining screws. The next step is to carefully remove the chrome retaining ring and cut the leads from the insert. Now the connector on the other end of the case is unscrewed and the leads cut. The switch is now drawn clear of the case.

Unscrew the grub screw on the cable connector and remove the spring cable protector. Knock out the fibre insulation in both connector pieces as in the converted set-up the connectors are used as an inlet for the cable only. The switch-to-talk requires the in-built switch to close in the "on" position and this means turning the inner section of it 180° to retain correct reading of the "on-off" indications.

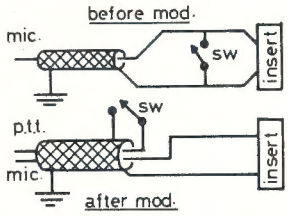

The switch modification is simple and only requires easing the clamps on one side of the assembly to allow the inner section to be removed and turned end for end and replaced. Tighten the clamps and check the switch function to ensure it closes in the "on" position.

If it is not considered important that the switch shows "on" or "off" in the correct order, it may be left unaltered **but** it may cause confusion especially if used by someone who is in the habit of using properly marked gear!

Rewire the microphone with two-core shielded cable, connecting the insert directly to the co-ax. The switch-talk lead is taken to one side of the switch, the other side to earth. The cable is passed through the modified connector and the grub screw tightened to hold the cable. All that is now required is simply a suitable three-connector plug to suit the transmitter.

* 7 Norman Ave., Frankston, Vic.

A PRINTED CIRCUIT TRANSISTORISED S.S.B. GENERATOR

A. S. LUNDY, VK2ASI*

FOLLOWING is a description of a compact all transistor 5 Mc. s.s.b. generator. Circuit board dimensions are 5" x 2¾" with a component depth of 2". Operation is from 12 volts at 8 mA. It was constructed as a basis for a 40 metre all transistor transceiver, which is planned for construction in the near future as an aeronautical mobile unit. Heterodyning to 2 metres with a balanced mixer is also contemplated.

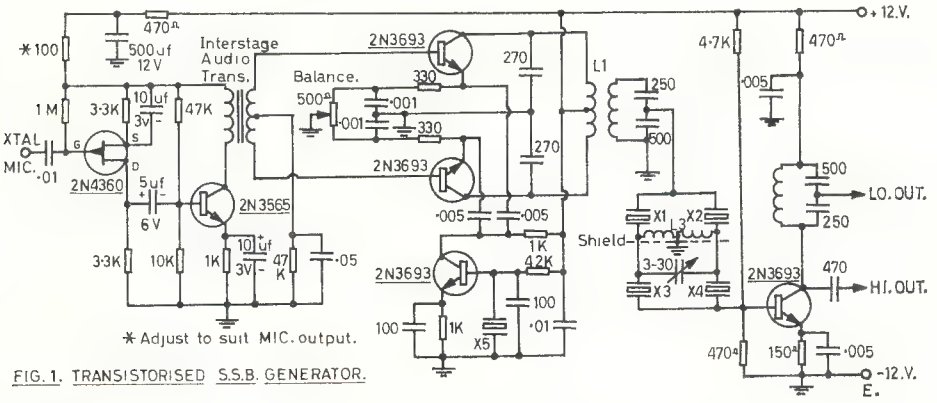

FIG. 1. TRANSISTORISED S.S.B. GENERATOR.

FILTER

The filter was constructed using 5205 Kv. FT243 crystals as per articles in "A.R." and "R.T. & H." The crystals were etched to frequency using dilute hydrofluoric acid, washed in water and dried with methylated spirits, then ether. Separation between pairs was approximately 1.5 Kc. The bandpass shape was determined by means of a modified version of the "R.T. & H." December '63 sweep unit and a c.r.o. with a suitable vertical amplifier. Sweep speed was 6 cycles per second. The sweep unit as described in the "R.T. & H." article was unsatisfactory at this slow speed, the right hand side of the trace exhibiting a greater slope than was really present.

The method of feeding the voltage dependent capacitor was also altered so as to cure an annoying back and forth drift of the scope pattern. The use of a potentiometer and a voltage dependent capacitor as the tuning element has also been used in the v.f.o. for the proposed transistor transceiver and gives excellent results. The filter shape obtained was quite satisfactory, ripple was less than 2 db. and the shape factor less than 2 to 1.

CIRCUIT BOARD

The required pattern was painted onto the blank board using Shellac in methylated spirits, and then etched in ferric chloride solution. The shellac was then removed with spirit. Holes for the components were drilled with a 1/32" drill. Crystal holes are 3/32" slightly enlarged. The shield between the pairs of crystals is attached by means of 18 gauge copper wire through the board in three places, and goes across the full width of the board.

CIRCUIT

Output from a high impedance crystal microphone is fed to the gate of a 2N4360 field effect transistor, then into a 2N3565 audio amplifier. A small interstage audio transformer supplies push-pull audio to the bases of a pair of 2N3693 balanced modulators. R.f. is fed in parallel to the emitters and the output is push-pull in the bifilar wound output coil. Exact balance is obtained by means of the 500 ohm pot. in the emitters, and this control can be mounted away from the unit if desired. Audio gain is controlled by the 100 ohm resistor in the positive supply to the audio stages. This can be replaced with a 500 ohm potentiometer if desired.

Input to the filter is via a capacitively tapped slug tuned coil wound on the same former as the balanced modulator bifilar coil. This former has two tuning slugs, one for each coil and is a t.v. plug-in coil 9/32" in diam. and 2" long. S.s.b. output from the filter is directly coupled to the 2N3693 amplifier base, the 470 ohm bias resistor is also the terminating resistor for the filter.

High impedance output to the grid of a following valve stage is taken from the collector of the 2N3693. A low impedance output is also provided to suit the base of a following transistor stage by means of the capacitive tap arrangement. The toroid coil across the filter was wound on the ferrite nut from the tank coil of the BC611 walkie talkie. A straight slug tuned bifilar coil can also be used.

TUNE-UP

The current drain of the various stages is as follows: 2N4360 1.5 mA., 2N3565 1.0 mA., balanced modulators 0.5 mA., crystal oscillator 3 mA., amplifier 2 mA.

(Continued on Page 10)

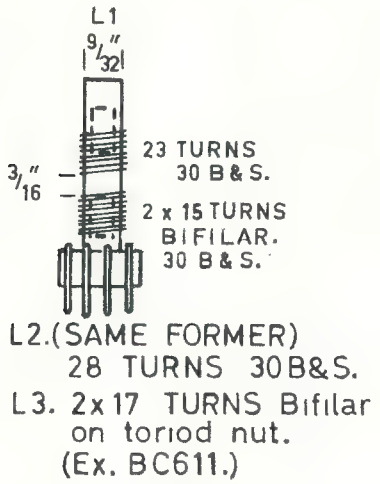

FIG. 2. COIL DETAILS

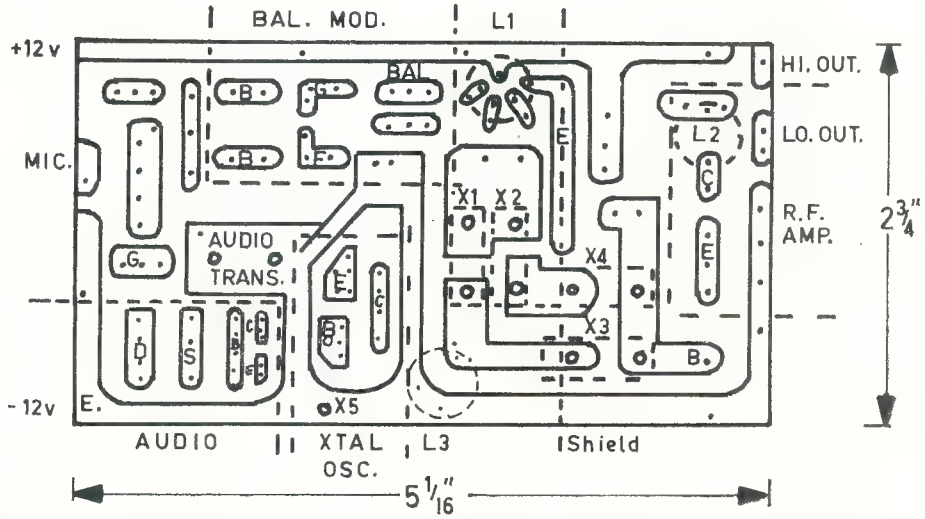

FIG. 3. PRINTED CIRCUIT BOARD LAYOUT.

* 36 Otho Street, Inverell, N.S.W., 2360.

Transistorised S.S.B. Generator

(Continued from Page 9)

The crystal filter was adjusted first using the sweep unit and c.r.o. No voltage was applied to the s.s.b. generator. Output from the sweep unit was applied to the collector of one balanced modulator via a few pF. capacitor and input to the c.r.o. was taken from the 470 ohm filter terminating resistor through a voltage doubling detector. The balanced modulator bifilar coil was adjusted for maximum scope pattern, then the filter input coil and toroid coil trimmer were adjusted for best filter response. A few pF. across one or more of the crystals will sometimes help.

The sweep unit was then disconnected and voltage applied to the s.s.b. generator. Input to the c.r.o. was then taken from the collector of the amplifier stage via a small capacitance and the c.r.o. r.f. probe. The balance potentiometer was turned fully one way and the balanced modulator bifilar coil repeaked for maximum pattern, then the amplifier stage tuned circuit was peaked. The balance control was then adjusted to reduce the carrier pattern, and it should be possible to get the carrier down to an almost indescernable level.

Audio is then applied to the microphone and the usual s.s.b. pattern should appear. Output is about ½ volt peak to peak, which should be sufficient for a following mixer. It is not possible to get any indication on a g.d.o. or diode plus meter, the use of a scope is necessary at the small power involved.

All transistors used are inexpensive Fairchild types, available from the manufacturer direct.

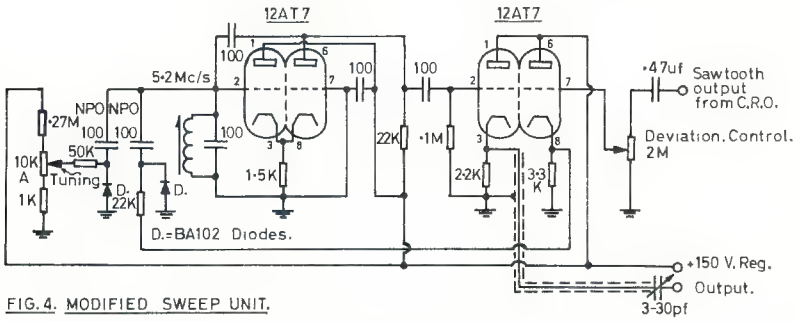

FIG. 4. MODIFIED SWEEP UNIT.

YOUTH RADIO SCHEME

There is no news this month which is not surprising as everyone is flat out working and studying for the end of the school year.

At this point I wish everyone a happy and safe holiday season and trust that all your hopes and plans for 1968 come true. Don't forget the Y.R.S. rule for safety—"Build projects which operate on low voltage as mains work can be quite dangerous until you have considerable experience with the power of electricity."

Each State now has an active Y.R.S. Supervisor and shortly I hope to have a complete list of names and addresses. However, in the meantime, if you wish information, the quickest way would be to contact the Secretary of your State W.I.A. to get the name of your Y.R.S. Supervisor.

There is a special correspondence service for those unable to attend a radio club or classes. Roger Davis, VK1RD, 14 Hovea St., O'Connor, A.C.T., 2601, is the Supervisor for the Correspondence Section and is always pleased to hear from anyone interested in learning radio by mail. There are printed courses available for each section of the total course which consists of the Elementary, Junior, Intermediate, Senior and Advanced. The course is designed essentially for school children and, therefore, is done in easy stages to cover a period of three years approximately. However, it is not limited to school children and several adults have already started the course. A letter to Roger could open up a whole new world for you. Best 73, Mona VK2AXS.

CHANGE OF ADDRESS

W.I.A. members are requested to promptly notify any change of address to their Divisional Secretary —not direct to "Amateur Radio."

PREDICTION CHARTS FOR DECEMBER 1967

(Prediction Charts by courtesy of Ionospheric Prediction Service)

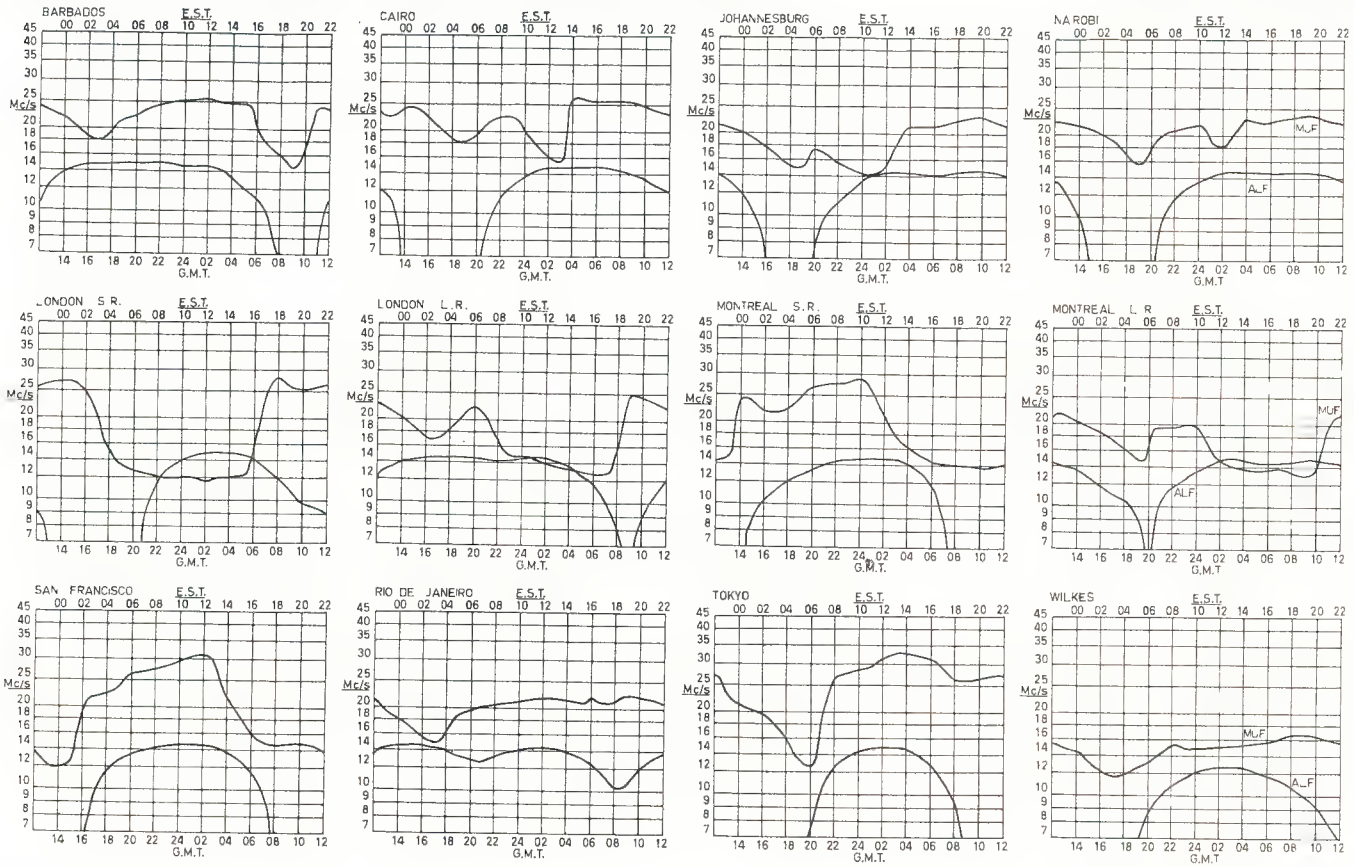

RHOMBICS AND CHAOS

A. J. C, THOMPSON, VK4AT*

WE, as a group, exist on sufferance as experimenters, mainly because of past pioneering radio successes by our Amateurs and to a certain extent also to our present Amateurs who toil by day in the professional field. This semi-professional type of writing by the above group is a product of modern trends. Without them the incomprehensible would remain as such to the average Amateur.

This does not necessarily mean that the non-technical Amateur is doomed to spend his leisure hours dial-twiddling or, if his pocket is elastic, to "duck talking". A glance through advanced technical books shows that all admit to having only a fractional knowledge of the subject under review.

Fortunately, advanced technical works are available from our city libraries, and are also available to the country dweller. These modern works include Electronics and Antenna Engineering Handbooks, etc. Except in the case of the research type their authors usually set out in understandable terms the non-technical principles discussed in the ensuing chapter. So actually the lofty title of the book can be ignored and similar treatment meted out to all squigly things observed in the text. Having spent some years in an institution where thousands of experiments were annually conducted, it was no hardship for me to curb my wishful thinking propensities and to judge facts without bias.

My present role as experimenter was forced on me. My QTH unfortunately is in the wrong end of a valley 100 miles N.W. from Brisbane. It is very badly situated for both t.v. and the Amateur bands, although the latter were tolerable with good conditions. I cast envious eyes on my southerly ridge 300 feet high and 2,000 feet distant, too far for transmission lines. Long wires towards Adelaide then Brisbane were followed by vees, then finally by a rhombic towards Sydney. (The rhombic encloses about 10½ acres with two-thirds mile of wire.)

In all cases, when their noses were poked over the top of that ridge they gave that consistency of signal which the multiband type situated inside the valley had failed to give. The results were still disappointing, due to their directional characteristics and lack of signal strength in the desired direction. A combination of the two would be ideal. Actual contact on various points of the multiband proved a failure.

Erratic success followed on the parallel connection of the 300 and 600 ohm feed lines and the inductive interaction of the fields, feeder to feeder, feeder to aerial, aerial to aerial, together with a right angle take-off from the apex of the rhombic's main axis. Swift switching arrangements were made for tests. These were:—

(1) Rhombic alone.
(2) Multi-band alone.
(3) Short section multi-band to right half of rhombic.
(4) Long section multi-band to left half of rhombic.
(5) Condenser across feeders.

The results were chaotic! Persistent efforts and consistent reports over long periods by long-suffering Amateurs gradually evolved a pattern of sorts. This became clearer when feeder radiation tests were conducted to see which legs were actually radiating during test periods. It appeared then that these curious and conflicting reports were due solely to an unorthordox application of standard procedures. The feeder tests showed that the transmitter would "see" the rhombic as one vee, the No. 3 group as another vee, and the No. 4 group as another vee. No. 5 would act as a slow switching device.

Once the rhombic and multi-band were connected by their feeders in parallel they ceased to exist as such. At this junction we could assume that:

(1) The physical and electrical axis of the rhombic differed.
(2) The impedance of each half differed.
(3) The impedance (as connected) of half the rhombic matched that of the multi-band one way, but not in the other configuration.

The surprising features were that:—

(1) Grounding of the feeders had little effect on either receiver or transmitter, but appeared to alter the radiation pattern.
(2) The rhombic was a quiet aerial under QRN conditions with a tremendous advantage over all combinations **on the receiver.**
(3) The multi-band combinations collected all the static around but, although more efficient, it was erratic in both cases.
(4) The radio blanketing or skip conditions that affected the multi-band in the valley could mean at times a gain of up to 4 S points in favour of the rhombic combinations if they were unaffected (on reception).
(5) The low-level rhombic gave a below-standard performance (on transmitter).
(6) The signal strength as registered on the receiver would be an indication of transmission suitability on that particular aerial in the case of 80 metres but it was not so on 40 metres.
(7) A slow QSB varied with two different aerials and it was less pronounced with both together than with either separately.
(8) The four ground "spears" **were not** at the same potential.

The minor effect produced by grounding both feeders could perhaps be explained by the unusual behaviour of terminating resistors. It appears that, under certain conditions, two receivers can operate at opposite ends (across a R) and in opposite directions. The terminating resistor may be a "tapered" or transmission line of similar characteristic-impedance or a suitable high loss attenuation line culminating in a resistor, centre tapped to earth. (The rhombics evidently are not fussy about which end these things go on) and I evidently just about reproduced these conditions on my end while still retaining an equally unorthordox resistor on the other end.

We note in passing that terminating resistors change "standing waves" rhombics to "travelling wave" types. This latter type have no antinodal points. The potentials and currents are approximately constant throughout its entire length. The feeder-radiation tests in conjunction with signal reports showed curious factors The rhombic appeared to give its best performance when one half radiated. The least output was when both sides appeared to be electrically balanced with equal radiation. Each vee combination gave similar results. In each case, maximum signal strength coincided with maximum radiation from only one leg. We could reasonably assume that the other leg is acting as a conveniently situated "ground" or counterpoise.

To conclude. I do not advocate such stunts for transmission purposes but long wires and dual aerials give very efficient service for receivers that single aerials could not equal. The very thought of returning to a single aerial apalls me. The fact that I got the right results by the wrong methods worries me not at all. What does worry me is the null that I have down Victoria way on 40 metres.

There is little doubt that, under my abnormal conditions, the combination multi-band and rhombic give the best results on transmission. (This is my standard antenna.) The multi-band is equal under good conditions. The same applies to reception except where QRN is present and presumably side-on. In that case the low-level rhombic is outstanding. (This is my standard antenna at night time.) I belong to the non-technical group, but I still have accumulated enough knowledge to realise that some of those results are not what you would reasonably expect. The multi-band is off-centre fed with 300 ohm line with an aerial-tuner. The transmitter is a Command.

The low-level rhombic's main axis is along the top of a ridge and would be approximately 100 feet average height above the actual wires themselves. This means that the left hand side is separated from the right hand, except at each end, by this ridge.

* Skyring Creek, Pomona, Qld.

AUSTRALIA'S BEST ANTENNA — HIGHEST QUALITY – UNBEATABLE PRICES

W.F.S. ELECTRONICS "GLOBECIRCLER"

Check these Technical Features and Prices. They cannot be equalled.

(1) **TRIBAND CUBICAL QUAD—**
Complete to last nut and bolt, strongly built from special light alloy and plastic. High efficiency performance, and easy to assemble.
Price $62.50 plus tax, F.O.R. Sydney

(2) **"YAGI" TYPE FULL SIZE BEAM ANTENNA**, for 20, 15, 10, 6 and 2 Metres—
Large range of FULL SIZE BEAM Antenna, top quality, 2 to 12 elements, special light alloy construction, top performance, can be stacked for full five-band beam results.
Prices: 10 mx 4 el., $33.00 plus tax; **15 mx 3 el., $27.00** plus tax; **20 mx 3 el., $40.00** plus tax

(3) **VERTICAL UNTRAPPED ALL-BAND ANTENNA** for 6 to 80 Metres—
Top performnig ALL-BAND VERTICAL Antenna. Special light alloy construction.
Price: $32.00 plus tax, F.O.R. Sydney

ALSO AVAILABLE—

★ **MOSELEY ANTENNAE**: TA33 Jr. Triband Shortened Beam; TA32 Jr. 2 El. Shortened Beam; TA31 Jr. 1 el. Shortened Beam.
★ **MOSELEY Conversion Kits** for TA31 and TA32 Jr. Beams; **Moseley** V3 Vertical, and **Moseley** RV5 **all-band** trapped Dipole.
★ **SWAN: Swantenna 45**, manual switch changed **all-band** Mobile Whip.
Swantenna 55, automatic remote changed **all-band** Mobile Whip.
★ **Newtronics** 4BTV Trapped Vertical with 80 metre coil.
★ **All Antenna Accessories:** Co-axial Plugs, Switches, Relays, Cables, etc.

REMEMBER! YOUR TRANSMITTER IS ONLY AS GOOD AS YOUR ANTENNA

W.F.S. ELECTRONICS SUPPLY CO.
225-227 Victoria Road, Rydalmere, N.S.W., 2116
Telephones: 638-1715, 638-1355

ATLANTIC RADIO
36 Oxford Street, Woollahra, N.S.W., 2025
Telephone 31-7811

Australian Distributors for: SWAN, HALLICRAFTERS, DOW KEY, PEARCE-SIMPSON

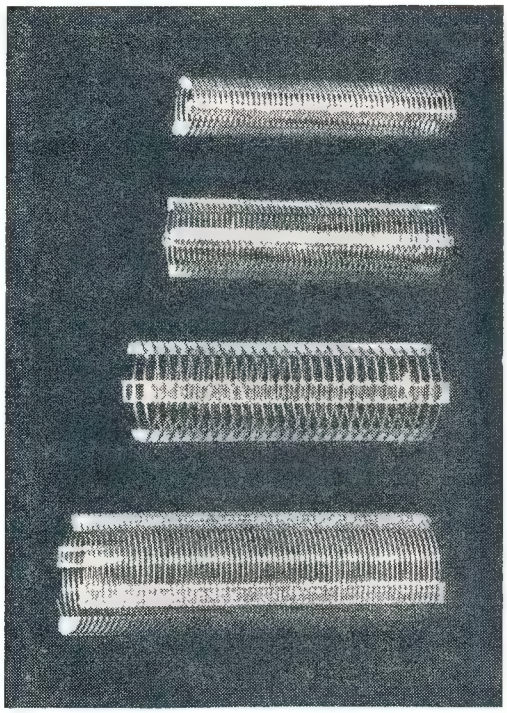

"WILLIS"

AIR-WOUND INDUCTANCES

Take the hard work out of Coil Winding—
use "WILLIS" AIR-WOUND INDUCTANCES

No.	Diam.	Turns per Inch	Length	B. & W. Equiv.	Price
1–08	½"	8	3"	No. 3002	**59c**
1–16	½"	16	3"	No. 3003	**59c**
2–08	⅝"	8	3"	No. 3006	**70c**
2–16	⅝"	16	3"	No. 3007	**70c**
3–08	¾"	8	3"	No. 3010	**82c**
3–16	¾"	16	3"	No. 3011	**82c**
4–08	1"	8	3"	No. 3014	**95c**
4–16	1"	16	3"	No. 3015	**95c**
5–08	1¼"	8	4"	No. 3018	**$1.28**
5–16	1¼"	16	4"	No. 3019	**$1.28**
8–10	2"	10	4"	No. 3907	**$1.55**

SPECIAL ANTENNA ALL-BAND TUNER INDUCTANCE
(equivalent to B. & W. No. 3907 7")
7" length, 2" diameter, 10 turns per inch, **$2.76**
References: A.R.R.L. Handbook, 1961; "QST," March 1959; "A.R.," Dec. 1959.

WILLIAM WILLIS & CO. PTY. LTD.

430 ELIZABETH STREET, MELBOURNE, VIC., 3000 — Phone 34-6539

TRANSISTORISED 2-METRE F.M. TRANSMITTER

Herewith are circuit diagram and the layout of a 2 metre f.m. transistorised transmitter built and tested on the air about 18 months ago by VK3ZRX. Since then he has not been able to write an article on the subject, and these brief details may be of interest to Amateurs.

Coils L1-L6 will work if they resonate with the capacity shown; a g.d.o. will fix this. Tune for maximum output.

L7 is a problem. VK3ZRX had one on hand that worked but the filter should roll off at 3 Kc.—values for C25 and C26 were used.

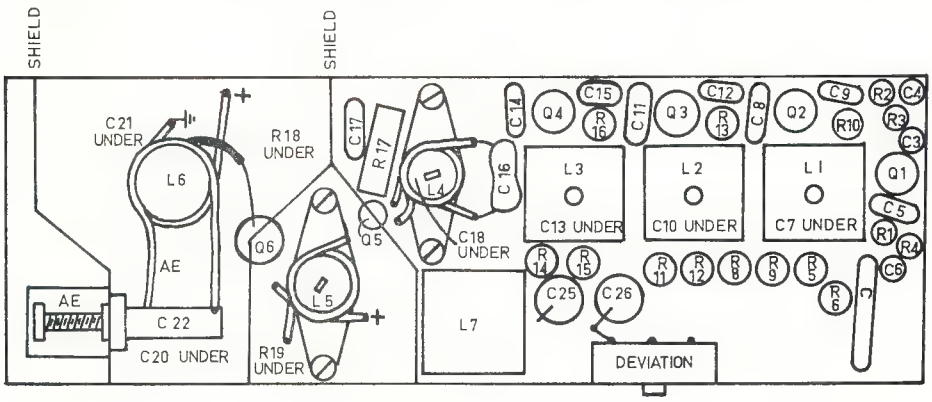

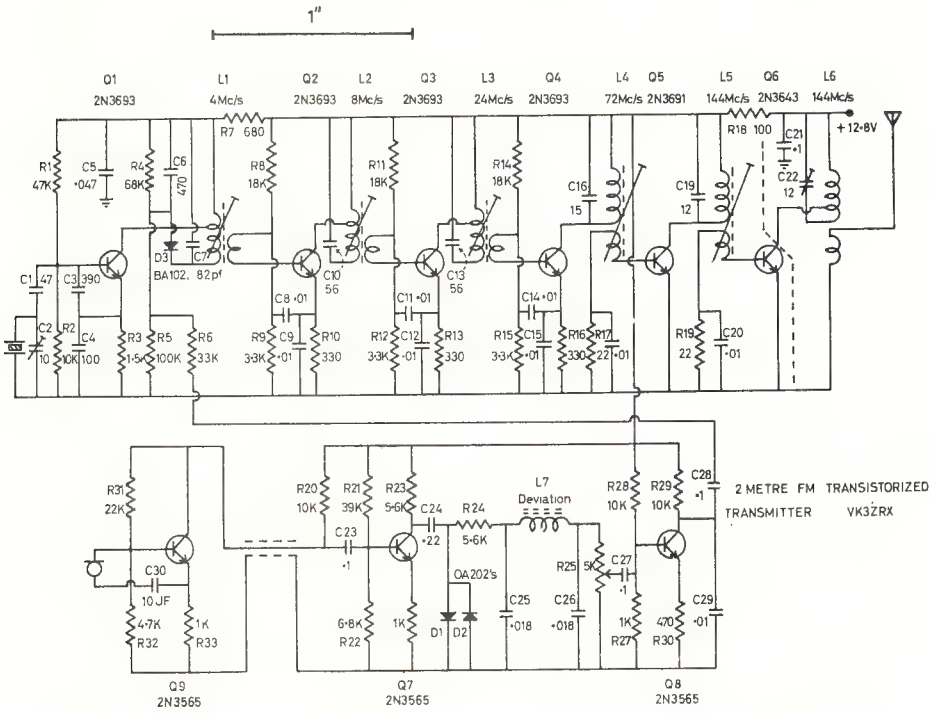

A red insert dynamic microphone was used in conjunction with the equipment.

Power output was 250 mW. at 145 Mc. and can be increased to 500 mW. with selected transistors at higher voltages (changing Q5 to 2N3643 may be necessary).

Ranges of 12 miles with ground plane to mobile, and about 6 miles mobile to mobile have been recorded.

Deviation of 60 Kc. was obtained without any trouble.

The circuit indicates what can be done **without** sophisticated circuitry **or** test equipment.

If the oscillator works then the whole thing can be aligned using only an r.f. probe and a sensitive multimeter. The deviation was set "on air".

Apologies that the audio section is not shown on the layout diagram. At the time the drawings were made this was still in breadboard form, all over the bench, but there is enough room if a pot core is used for L7 and the mike preamplifier is external.

—D. M. Bennett, VK3ZRX.

— . . . —

CONVERTING CARPHONES

(Continued from Page 4)

20 Tx to Rx:	**Rec. Octal:**
Pin 1—LT active.	Vib. tans.
„ 2—LT active.	Vib. reed.
„ 3—Rec. ON relay.	Earth.
„ 4—Audio com.	LT active.
„ 5—Speaker.	+150v. HT.
„ 6—600 ohm out.	Audio com.
„ 7—Earth.	Speaker.
„ 8—+150v. in.	600 ohm out.
„ 9—+150v. out.	
„ 10—Bias.	
„ 11—Mute.	
„ 12—Mute.	

20 Tx to Control:	**Tx Octal:**
Pin 1—LT active.	Vib. coil.
„ 2—Trans. ON rly.	LT active.
„ 3—Rec. ON rly.	HT return.
„ 4—Audio com.	Bias.
„ 5—Speaker.	PTT relay.
„ 6—600 ohm out.	+300v.
„ 7—Mic.	Earth.
„ 8—PTT relay.	Mic.
„ 9—+150v.	
„ 10—Bias.	
„ 11—Mute.	
„ 12—Mute.	

ACKNOWLEDGMENTS

The author wishes to thank Jim Stewart, VK3AS, for checking the manuscript before publication and making several useful suggestions. Acknowledgment of the help of Bert Smith, VK3AAF, and Ed Manifold, VK3EM, is also made.

FEDERAL COMMENT

(Continued from Page 2)

"Once again I thank you for giving me this opportunity to make my humble contribution to this international fraternity and it is my hope that the Radio Amateur movement will progress, expand and prosper **as it deserves**."

Those comments from the Secretary-General of the I.T.U. made in Geneva at the 1967 I.A.R.C. Convention seem to indicate a favourable attitude to Amateur Radio on his part!

With regard to the International Amateur Radio Club, Roy Stevens, G2BVN, Immediate Past President of R.S.G.B., Vice-Chairman of I.A.R.U. Region I. Executive Committee, who recently attended the I.A.R.C. Convention, comments in a report kindly sent to Federal Secretary W.I.A. as follows:

". . . the I.A.R.C. can fulfill a worthwhile function. It provides an entry to the I.T.U. and to the Secretary-General and the members of the C.C.I.R. and the I.F.R.B. Without the annual Convention and the permanent Amateur Station (4U1ITU Geneva) it would be more difficult to find an opportunity to talk freely with the staff members of the I.T.U. M. Mili has shown himself to be sympathetic to the Amateur movement, and I believe I have established with him a degree of personal friendship which might be of advantage at some future time."

This comment clearly shows up the value of **personal** contact between Amateurs at international level, and between Amateurs and the I.T.U. Australia was not represented at either of the I.A.R.U. Regional Conferences held recently, or at the I.A.R.C. Convention in Geneva!

NEW CALL SIGNS

JUNE-AUGUST, 1967

VK1AM—L. L. McGarry, 20 Harris St., Hackett, 2602.
VK1DB—D. A. R. Brown, 9 Arkana St., Yarralumla, 2600.
VK1FB—J. B. B. White, 38 Cox St., Ainslie, 2602.
VK1GS—G. A. Sangster, 105 A'Beckett St., Watson, 2602.
VK1VE—T. Van Eck, 162 Duffy St., Ainslie, 2602.
VK1ZRS—R. J. Swan, 16 Barkly Cres., Forrest, 2603.
VK2AQ—J. R. Tapper, 9 Sullivan Ave., Wagga Wagga, 2650.
VK2JG—School of Applied Electricity, Sydney Technical College, Harris St., Ultimo, 2007.
VK2WJ—L. G. H. T. Robertson, 63 Rosedale Rd., East Gordon, 2072.
VK2WN—J. A. Hampel, 3 Sylvia Pl., French's Forest, 2086.
VK2YX—P. D. Williams, 52 Acacia Rd., Sutherland, 2232.
VK2BBF—G. C. Fletcher, 19 Brook St., Thornleigh, 2120.
VK2BCK—R. C. Kirkwood, 15 Grant St., Port Macquarie, 2444.
VK2BCU—R. D. Coleman, Station: Port Hacking Rd., Miranda, 2228; Postal: P.O. Box 19, Kingsford, 2032.
VK2BCY—C. T. Young, 2 Iredale Ave., Cremorne, 2090.
VK2BEF—C. E. Fredrickson, 14 Hillpine Ave., Kogarah, 2217.
VK2BEL—E. L. Colyer, 20 Burgoyne St., Gordon, 2072.
VK2BHV—Maitland Y.M.C.A. Radio Club, Station: 264 High St., Maitland, 2320; Postal: P.O. Box 54, Maitland, 2320.
VK2BJG—J. E. George, 59 Greenslopes Cres., Mt. Ousley, Wollongong, 2500.
VK2BPK—Parkes and District Amateur Radio Club, 53 Clarinda St., Parkes, 2870.
VK2BPO—J. C. Smyser, C/o. D. Duff, 34 William St., Hornsby, 2077.
VK2BPP—N. L. Pinkerton, 1 Kings Pl., Carlingford, 2118.
VK2BUG—F. D. Voight, Officers' Mess, R.A.A.F., Richmond, 2755.
VK2BWR—W. R. Rindone, 34 William St., Hornsby, 2077.
VK2ZHR—P. Halpin, 19 Morton St., Waverton, 2060.
VK2ZIQ—C. J. Nutt, 8 Spearman St., Roseville, 2069.
VK2ZJT—J. A. Craike, 400 Avoca St., Kingsford, 2032.
VK2ZJY—B. B. Jones, 23 Amarna Pde., Roseville, 2069.
VK2ZKX—R. G. Dixon, 17 Lanthams Rd., Model Farms, 2153.
VK2ZKZ/T—K. E. Riley, 11 Chapman St., Strathfield, 2135.
VK2ZMY—K. A. McGarrity, 229/31 Macquarie St., Sydney, 2000.
VK2ZMZ—J. G. McCloughan, 450 Blaxcell St., Guildford, 2161.
VK2ZNK—A. K. Nikku, Cabramatta Hostel, Cabramatta, 2166.
VK2ZOG—M. W. O'Grady, 216 Ellesmere Rd., Guymea Bay, 2227.
VK2ZPB—P. F. Bell, 59 Station St., West Ryde, 2114.
VK2ZQC—G. V. Cooley, Lot 6, Main Rd., Medowie, 2301.
VK2ZSN—R. Shuetrim, 19 Stirling Cres., Lilli Pilli, 2229.
VK2ZST—E. R. Cousins, 34 Fiona Rd., Beecroft, 2119.
VK2ZTW—E. W. Howell, Werombi Rd., Camden, 2570.
VK2ZUP—W. H. Holliday, 3 Koora Ave., Wahroonga, 2076.
VK2ZVM—Maitland Y.M.C.A. Radio Club, Station: 264 High St., Maitland, 2320; Postal: P.O. Box 54, Maitland, 2320.
VK2ZVP—R. H. Little, Station: 53 Clarinda St., Parkes, 2870; Postal: 4 Fisher St., Parkes, 2870.
VK2ZWO—J. H. Howe, 9/2 Dolphin St., Randwick, 2031.
VK2ZWP—W. T. Rice, 60 O'Connor St., Kogarah, 2217.
VK2ZYK—D. S. Frazer, 221 Park Ave., Kotara, 2288.
VK3HI—L. A. F. Grant, 2 Wellington St., Lower Templestowe, 3107.
VK3OI—W. J. Miller, 25 Rivette St., Mordialloc, 3195.
VK3OO—M. M. Thompson, 15 Dover Pl., Parkdale, 3194.
VK3AFE B. F. Huggard, 18 Elster Ave., Gardenvale, 3185.
VK3ATQ—T. E. Whitfield, 1024 Nepean H'way, Rye, 3941.
VK3AUH—R. R. Hooper, 13 Laurens St., Rosebud, 3939.
VK3ZCJ—G. G. Baker, Old Dandenong Rd., Heatherton, 3202.
VK3ZCQ—G. D. Johnson, "Weller Lodge," 169 Canterbury Rd., Canterbury, 3126.
VK3ZDS—E. W. Templeton, "Carinya," Tahara Bridge, 3301.
VK3ZKD—K. D. Schuhen, 20 Scott Gr., Burwood, 3125.
VK3ZMB—N. W. G. Barker, 458A Kooyong Rd., South Caulfield, 3162.
VK3ZQR—G. A. D. Thomson, 115 Hawdon St., Heidelberg, 3084.
VK3ZUU—V. Kondratiev, 5 Wren St., Altona, 3018.
VK3ZVM—L. C. Morgan, 23 Walbundry Ave., North Balwyn, 3104.
VK3ZVU—Z. Svalbe, 45 Surrey Rd., Mt. Waverley, 3146.
VK3ZWC—T. J. Conboy, 36 Laurence St., Middle Brighton, 3186.
VK3ZWW—J. Hubregtse, Jnr., 74 Maddox Rd., Newport, 3015.
VK3ZWZ—R. K. Whalley, 3 Dwyer St., Blackburn, 3130.
VK3ZXS—P. A. Stroude, Lot 38, Shelley Ave., Bayswater, 3153.
VK3ZYH—L. N. Hocking, 7 Noonan St., Benalla, 3672.
VK3ZYT—G. S. Taylor, 19 Simpsons Rd., Box Hill, 3128.
VK3ZZM—L. P. Mion, 114 Esdale St., Nunawading, 3131.
VK4GI—G. A. Bonney, 18 Greatheads Rd., Bundaberg, 4670.
VK4GU—J. G. Karrsberg, 30 McDowall St., Toowoomba, 4350.
VK4HG—J. M. Hamilton, Station: Willis Island; Postal: 37 Byfield St., Reservoir, Vic., 3073.
VK4IH—I. H. Mullins, 45 MacIlwraith St., Cairns, 4870.
VK4KF—W. D. Macaulay, 25 Parkmore St., Boondall, 4034.
VK4KG—K. G. Avery, Officers' Mess, R.A.A.F. Base, Amberley, 4305.
VK4OP—R. K. Pietrala, Samsonvale Rd., Strathpine, 4500.
VK4ZCE—C. E. Meredith, King's College, Upland Rd., St. Lucia, 4067.
VK4ZCO—R. H. Coat, 14 Jellicoe St., Coorparoo, 4151.
VK4ZDC—D. C. Hunter, 94 Prince St., Annerley, 4103.
VK4ZGS—G. C. Squelch, 10 Row St., Ingham, 4850.
VK4ZVH—H. V. Hunt, Flat 2, 371 Coronation Dr., Auchenflower, 4066.
VK5DN—R. A. Daniells, 22 Jervois Ave., Magill, 5072.
VK5IE—T. H. Baker, 28 Wilkins St., Glengowrie, 5044.
VK5UW—R. F. Daniels, 2 Ridgecrest Ave., Darlington, 5047.
VK5VK—W. P. Kempster, Emmetts Rd., Crafers, 5152.
VK5WU—N. J. Worthington, Lot 199, Doradus Ave., Hope Valley, 5090.
VK5XG—G. N. Antuar, 40 Main St., Peterborough, 5422.
VK5XW—G. P. Shields, Warland Ave., Victor Harbour, 5211.
VK5ZBL—R. L. Mayfield, 35 Astrid Ave., Warradale, 5046.
VK5ZBQ—B. R. Williams, 13 Chatsworth Gr., Toorak Gardens, 5065.
VK5ZEI—O. A. Isaachsen, 70 Arthur St., Unley, 5061.
VK5ZFL—J. R. Birrell, 5 Franklin Tce., Mt. Gambier, 5290.
VK5ZKD—K. D. J. Prendergast, 34 Manningford Rd., Elizabeth South, 5112.
VK5ZSV—V. L. Schwinger, 86 Hincks Ave., Whyalla, 5600.
VK5ZWK—K. D. Wildash, 82 Baker St., Glengowrie, 5044.
VK5ZWW—W. A. Watkins, Station: 45 Edward St., Norwood, 5067; Postal: C/o. Pept. of Interior, Box 336C, G.P.O., Adelaide, 5001.
VK6AD—A. W. Stewart, 8 Palm St., Bunbury, 6230.
VK6CZ—G. R. Potter, 18 Tautog St., Exmouth, 6707.
VK6PA—K. C. Parker, 82 Broadway, Bassendean, 6054.
VK6ZCE—C. Morey, 32 Redcliffe Rd., Redcliffe, 6104.
VK6ZHB—H. G. Buckley, 386 Fitzgerald St., North Perh, 6006.
VK7HE—H. E. Hewens, 176 Charles St., Launceston, 7250.
VK7WF/T—W. J. Emmett, Station: 134 Wilson St., Burnie, 7320; Postal: 6 Haig St., Lenah Valley, 7008.
VK7ZAE—A. R. Everts, 88 Goulburn St., West Hobart, 7000.
VK7ZCW—C. D. Walker, 122 Granville St., Launceston, 7250.
VK7ZDF—R. H. Ferris, C/o. Mersey General Hospital, Latrobe, 7307.
VK7ZED—I. L. Eadie, 23 Culloden Ave., Moonah, 7009.
VK7ZRV—R. J. Verrall, 105 Arthur St., West Hobart, 7000.
VK8GU—W. B. McIntosh, Station: Eldo Tracking Station, Gove, N.T., 5777; Postal: 1433 South Rd., Bedford Park, 5042.
VK8PT—C. C. Talbert, Batchelor, N.T., 5791.
VK8UG—Gove Social Club, Eldo Tracking Station, Gove, C/o. P.M.B. Darwin, N.T., 5794.
VK8ZBG—H. N. G. Broadbent, Peko Mines, Tennant Creek, N.T., 5760.
VK9AA—E. R. Metzger, Station: Portable; Postal: Gafamo, P.O. Goroka, T.P.N.G.
VK9BK—B. M. Kidgell, Station: No. 25, First St., Lae, T.P.N.G.; Postal: C/o. Posts and Telegraphs, P.O. Box 399, Lae, T.P.N.G.
VK9WB—W. Bowles, Station: S.I.L., Ukarumpa, E.H.D., T.P.N.G.; Postal: S.I.L., P.O. Ukarumpa, E.H.D., T.P.N.G.
VK9ZCH—C. H. Hocking, Station: Lot 5, Section 74, Pepigari St., Korobosea, Port Moresby; Postal: C/o. A.B.C., P.O. Box 1359, Boroko, T.P.N.G.

DURALUMIN, ALUMINIUM ALLOY TUBING

IDEAL FOR BEAM AERIALS AND T.V.

★ LIGHT ★ STRONG ★ NON-CORROSIVE

STOCKS NOW AVAILABLE FOR IMMEDIATE DELIVERY

ALL DIAMETERS—¼" TO 3"

Price List on Request

STOCKISTS OF SHEETS—ALL SIZES AND GAUGES

GUNNERSEN ALLEN METALS PTY. LTD.

SALMON STREET, PORT MELBOURNE, VIC.
Phone: 64-3351 (10 lines)
Telegrams: "Metals," Melb.

ADELAIDE GAM MELBOURNE

HANSON ROAD, WINGFIELD, S.A.
Phone: 45-6021 (4 lines)
Telegrams: "Metals," Adel.

JOHN MOYLE MEMORIAL NATIONAL FIELD DAY CONTEST, 1968

SATURDAY, 3rd FEBRUARY, 1968, TO SUNDAY, 4th FEBRUARY, 1968

The Federal Contest Committee of the Wireless Institute of Australia invites all Australian Amateur and Short Wave Listeners to participate in this Annual Contest, which is held to perpetuate the memory of John Moyle, whose efforts advanced the Amateur Radio Service.

There are two divisions of this Contest, one of 24 hours continuous duration, and one of 6 hours continuous duration. The six-hour period has been included to encourage the operator who is unable to participate for the full 24-hour period.

Operators using 25 watts or less input to the final stage will be considered for a certificate where his activity warrants its issue.

DATE

From 0800 GMT, 3rd February, 1968, to 0800 GMT, 4th February, 1968.

OBJECTS

The operators of Portable and Mobile Stations within all VK Call Areas will endeavour to contact other Portable/Mobile and Fixed Stations in Australia and Overseas Call Areas.

RULES

1. There are two divisions, one of six (6) hours, and one of twenty-four (24) hours duration. The six-hour period for operating may be chosen from any time during the Contest. but the six-hour period so chosen **must** be **continuous.** In each division, there are six sections:—

(a) Portable/Mobile Transmitting, Phone.
(b) Portable/Mobile Transmitting, C.w.
(c) Portable/Mobile Transmitting, Open.
(d) Portable/Mobile Transmitting, Multiple Operation, open only.
(e) Fixed Transmitting Stations working Portable/Mobile Stations, open only.
(f) Reception of Portable/Mobile Stations.

2. All Australian Amateurs are encouraged to take part. Operators will be limited to their licensed power. This power shall be derived from a self-contained and fully portable source.

(a) Portable/Mobile Stations shall not be situated in any occupied dwelling or building. Portable/Mobile Stations may be moved from place to place during the Contest.

No apparatus shall be set up on the site earlier than 24 hours prior to the Contest.

All Amateur bands may be used, but no cross band operating is permitted. Cross mode operation is permitted.

Entrants in Section (d) for Multiple Operator Stations can set up separate transmitters to work on different bands at the same time. All such units of a Multiple Operator Station must be located within an area that can be encompassed by a circle not greater than half a mile diameter.

For each transmitter of a Multiple Operator Station a separate log shall be kept with serial numbers starting from 001, and increasing by one for each successive contact. All logs of a Multiple Operator Station shall be submitted by the operator under whose Call Sign the transmitters are working. No two transmitters of a Multiple Operator Station are permitted to operate on the same band at any time.

3. Amateurs may enter for any section.

4. One contact per station for phone to phone, also one for c.w. to c.w. per band is permitted. Cross mode operation will be accepted for scoring.

5. Entrants must operate within the terms of their licences and in particular observe the regulations with regards to portable operation.

6. Serial numbers consisting of RS or RST report plus three figures commencing with 001 and increasing by one for each successive contact shall be exchanged.

7. **Scoring—**

(a) **Portable/Mobile Stations:**

For contacts with Portable/Mobile Stations outside entrant's Call Area .... **15 points**

For contacts with Portable/Mobile Stations within entrant's Call Area .... **10 points**

For contacts with Fixed Stations outside the entrant's Call Area .... **5 points**

For contacts with Fixed Stations within the entrant's Call Area .... **2 points**

(b) **Fixed Stations:**

For contacts with Portable/Mobile Statons outside entrant's Call Area .... **15 points**

For contacts with Portable/Mobile Stations within entrant's Call Area .... **10 points**

8. The following shall constitute Call Areas: VK1, VK2, VK3, VK4, VK5, VK6, VK7, VK8, VK9 and VK0.

9. All logs shall be set out under the following headings: Date/Time (G.M.T.), Band, Emission, Call Sign, RST/No. Sent, RST/No. Received, Points Claimed. Contacts must be listed in numerical order.

In addition, there shall be a front sheet showing the following information:—

Name .....Address . . ..

Call Sign ... .Section .. ..

Division..... (6-hour or 24-hour)

Points Claimed ....

Call Sign of other op./s (if any) .....

Location of Portable/Mobile Station ...

From . . hours to . . . . hours

A brief description of equipment used, and points claimed, followed by the declaration:

"I hereby certify that I have operated in accordance with the rules and spirit of the Contest."

Signed .....Date.....

10. The right is reserved to disqualify any entrant who, during the Contest, has not observed the Regulations and the Rules of this Contest, or who has consistently departed from the accepted code of operating ethics.

11. The decision of the Federal Contest Manager of the Wireless Institute of Australia is final and no disputes will be entered into.

12. Certificates will be awarded to the highest scorer of each section of each division. Additional certificates may be issued at the discretion of the F.C.C. The six-hour certificates cannot be won by a 24-hour entrant.

13. **Return of Logs:**

All entries must be postmarked not later than 29th February, 1968, and be clearly marked "John Moyle Memorial National Field Day Contest, 1967," and addressed to:—

Federal Contest Manager, W.I.A., Box N1002, G.P.O., Perth, 6001, Western Australia.

RECEIVING SECTION

14. This section is open to all Short Wave Listeners in VK Call Areas. The Rules shall be the same as for the Transmitting Stations, but may omit the serial numbers received.

Logs must show the Call Sign of the Station heard, the serial number sent by it, and the Call Sign of the Station being worked.

Scoring will be on the same basis as for Transmitting Stations. It will not be sufficient to log a station calling CQ. A station may be logged once only for phone and once for c.w. in each band.

Awards: Certificates will be awarded for the highest scorer in each Call Area.

WARBURTON FRANKI

PRINTED CIRCUIT COMPONENTS

COPPER BACKED MATRIX BOARD

Size:	3" x 3"	**58c**
	6" x 6"	**$1.75**
	9" x 9"	**$3.63**

Plus S.T. 12½%.
Plus Pack and Post 5c per board.

ALSO PLAIN COPPER BACKED BOARD

Size:	6" x 3"	**20c**
	6" x 6"	**36c**
	12" x 3"	**36c**
	9" x 6"	**48c**
	12" x 12"	**$1.24**

Plus S.T. 12½%.
Plus Pack and Post 5c per board.

PROCESS KIT

Contains: Ferric Chloride, Bituminous Paint, Resin, and Instructions.

68c plus S.T. 12½%.
Plus Pack and Post 10c.

SPEAKER TRANSFORMERS

E TYPE. 5,000 or 7,000 ohms to 3.5 ohms, or 15 ohms.

$1 plus S.T. 25%.
Pack and Post 15c.

PANEL METERS

Moving Iron AC/DC Meters. 1⅞" square. Ranges available:—

0-10, 0-20, 0-30, 0-40, 0-50 volts.
0-1, 0-5, 0-10, 0-20 amps.

$3.50 each. Post free.

special

11 TRANSISTOR TRANSCEIVERS

- P.M.G. APPROVED
- R.F. STAGE
- SQUELCH CIRCUIT

$60.00

Plus S.T. 12½%, plus freight 50c

IMPORTED ROSENTHAL HIGH STABILITY RESISTORS

1 WATT RATING

★ 15 ohms to 8.2 megohms ±1%.
★ 11 megohms to 30 megohms ±2%.

18c each plus S.T. 12½%.
Write or call for list of sizes available.

807 VALVES

AMERICAN SYLVANIA

$1.75 each or
$18.00 dozen
including Tax and Postage.

AUDIO AMPLIFIER MODULES

Four-Transistor: 1 watt output.
High Impedance input: 100K ohms.
Low Impedance input: 1K ohms.
Output Impedance: 4, 8 or 16 ohms.
Power source: 6 volts.
Gain: 70 db.
Size of board: 4½" x 2" approx.
Supplied with circuit and wiring instructions.

$7.50 plus S.T. 12½%.
Pack and Post 20c.

POWER SUPPLY BASIC KITS

- For supplying 9 or 12 volts DC at 500 mA. Comprising A & R Transformer, Contact Cooled Rectifier, and 1000/15 Filter Capacitor.

$3.50 including S.T. and Postage.

- To give 250 volts DC at 60 mA. and 6.3 volts AC at 2 amperes. Comprising A & R Transformer, Contact Cooled Rectifier, 50 plus 50/350 Filter Capacitor.

$5.50 including S.T. and Postage.

WARBURTON FRANKI

220 PARK ST. SOUTH MELB., VIC. PHONE 30 lines **69-0151**

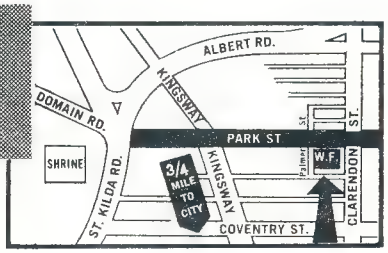

Please include postage or freight with all orders

WORKED FROM ALL VIC. NATIONAL PARKS AWARD

AND

WORKED ALL VIC. NATIONAL PARKS AWARD

In order to stimulate activity, and to have awards available for those whose interest is mainly centred round the 160, 80 and 40 metre bands, the Victorian Division of the W.I.A. has inaugurated these awards, to be effective as from the 1st December, 1967.

Although primarily to stimulate low frequency activity, any Amateur band may be used, as may any authorised mode. The rules, which are set out below, have been kept simple, but it is suggested that operators from any of the Parks be careful to show on their cards the location from which they operate.

The twenty National Parks in Victoria are listed below:

1. **Alfred**—On Princes Highway, 300 miles East of Melbourne.
2. **Bulga**—On Grand Ridge Road, South Gippsland.
3. **Churchill** — On Scoresby-Rowville Road, between Dandenong and Ferntree Gully.
4. **Ferntree Gully**—22 miles East of Melbourne beyond Upper Ferntree Gully.
5. **Fraser**—On the Western shore of Lake Eildon.
6. **Glenaladale**—18 miles North of Princes Highway at Fernbank, 180 miles East of Melbourne.
7. **Hattah Lakes**—22 miles North of Ouyen.
8. **Kinglake**—40 miles North of Melbourne.
9. **The Lakes** (Spermwhale Head)—200 miles East of Melbourne. Access by road from Sale or by boat from Gippsland Lakes.
10. **Lind**—On Princes Highway, between Orbost and Cann River.
11. **Mallacoota Inlet**—340 miles East of Melbourne, near N.S.W. border.
12. **Morwell**—100 miles East of Melbourne, near Jumbuck Road.
13. **Mount Buffalo**—200 miles North-East of Melbourne.
14. **Mount Eccles**—200 miles West of Melbourne.
15. **Mount Richmond**—20 miles West of Portland.
16. **Port Campbell**—On Great Ocean Road, 150 miles West of Melbourne.
17. **Tarra Valley**—On Tarra Valley Road, 20 miles from Yarram.
18. **Wilson's Promontory** — 150 miles South-East of Melbourne.
19. **Wingan Inlet**—23 miles South of Princes Highway at a point about 310 miles East of Melbourne.
20. **Wyperfeld**—287 miles North-West of Melbourne and 30 miles North of Rainbow.

The awards are available without cost to any licensed Amateur who fulfils the requirements of the rules.

To maintain interest, participants are invited to advise the Victorian Divisional Secretary of their progressive scores for publication in "Amateur Radio".

To assist in the inauguration, Zone Secretaries and any other interested parties are requested to make an effort to get operators into National Parks on **Sunday, 9th December.** If there proves to be sufficient interest, the Victorian Division will consider a **Worked All Parks From All Parks Award.**

WORKED FROM ALL VICTORIAN NATIONAL PARKS AWARD

Object: This award has been created to stimulate portable and mobile activity on the lower frequencies, to assist participants in the W.A.V.N.P. award, and to give successful operators some tangible evidence of their achievements.

This award, to be known as the W.F.A.V.N.P. award, will be issued to any Amateur who satisfies the conditions hereunder.

Requirements: Two-way contacts must be made while operating either portable or mobile from Victoria's National Parks.

Applicants may use any Amateur frequency and any authorised mode. Contacts through relay or repeater stations will not be accepted.

Awards: To qualify for an award, contacts must be made from at least 15 of the 20 National Parks in Victoria.

Awards will be endorsed for Parks over and above the minimum requirement of 15.

Verifications: The Secretary of the Victorian Division may use his discretion whether or not QSL cards are to be submitted, but in general a declaration, signed by the applicant, that he has operated in accordance with the spirit and rules of the award, and listing the Parks from which he operated and the dates and times of such operation, will be accepted as sufficient evidence that the operations have taken place.

Applications must be made in writing to the Secretary, Victorian Division, Wireless Institute of Australia, and accompanied by the declaration mentioned above.

The Victorian Division reserves the right to vary the minimum requirements in the event that the number of National Parks be altered.

In all cases of dispute, the decision of the Victorian Secretary and any two members of the Victorian Divisional Council shall be final and binding.

No charge will be made for this award.

WORKED ALL VICTORIAN NATIONAL PARKS AWARD

Objects: This award has been created in order to stimulate activity on the lower frequencies, to increase appreciation of Victoria's scenic attractions and to give successful operators some tangible evidence of their achievements.

This award, to be known as the W.A.V.N.P. Award, will be issued to any Amateur who satisfies the conditions hereunder.

Requirements: Contacts must be made with Amateur Stations operating either portable or mobile in Victoria's National Parks.

Applicants may operate portable, mobile or home station, on any Amateur frequency and use any authorised mode. Contacts through relay or repeater stations will not be accepted.

Awards: To qualify for an award, contacts with at least 15 of the 20 National Parks must be made.

Awards will be endorsed for meritorious achievements, i.e. working all parks on one band. Additional endorsements will be made for each band on which all Parks are worked, as well as for Parks over and above the minimum requirement of 15.

Verifications: The Secretary of the Victorian Division may use his discretion whether or not QSL cards are to be submitted, but in general a declaration signed by two other Amateurs, stating they have sighted the confirmation will be accepted as sufficient evidence that the contacts have been made.

Applications must be made in writing to the Secretary, Victorian Division, Wireless Institute of Australia, and be accompanied by the declaration mentioned above.

The Victorian Division reserves the right to vary the minimum requirements in the event that the number of National Parks be altered.

In all cases of dispute, the decision of the Victorian Divisional Secretary and any two members of the Victorian Divisional Council shall be final and binding.

No charge will be made for this award.

A.R.R.L. TECH. MERIT AWARD

At the Victorian Division's Annual Dinner, held during the first week in November, a very great honour was paid to a Victorian Amateur Radio Operator, in that the Federal President of W.I.A., Max Hull, VK3ZS, on behalf of A.R.R.L., conferred the A.R.R.L. Technical Merit Award for this year on Ray Naughton, VK3ATN.

Max introduced Ray to the Senior P.M.G. Official present at the Dinner (Mr. E. J. Wilkinson, Acting Assistant Director General Radio) and spoke highly of the past and present efforts of Amateurs in pushing back the frontiers of technological and scientific advancement. A handsome plaque inscribed "A.R.R.L. Technical Merit Award presented to Bill Conkel, W6DNG, and Ray Naughton, VK3ATN, for advancing the frontiers of Amateur Radio by proving communication via lunar reflection to be within the realm of conventional Amateur operation" was presented to Ray by Mr. Wilkinson.

In presenting this plaque, Mr. Wilkinson referred to the interest in Amateur experimentation taken by his Department, and also to the assistance which could be given to Ray in his future moonbounce activities. He read a letter from A.R.R.L. which was addressed to VK3ATN from W1LVQ, General Manager of A.R.R.L., which stated:

"The A.R.R.L. Technical Merit Award was created by our Board of Directors to be presented to Amateurs chosen for outstanding technical contributions to Amateur Radio. This year's Board voted to present the award to you, VK3ATN, and Bill Conkel, W1DNG, for your outstanding moonbounce efforts. This is the first time the Board has made this award to an Amateur from a country other than the U.S. We want you to know that your work is appreciated by Amateurs in the U.S.

"Congratulations from Headquarters of A.R.R.L. We wish you well in your continuing efforts."

In reply to the Federal President and Mr. Wilkinson, Ray thanked the W.I.A. for the invitation to be a guest at VK3 Division's Annual Dinner, and thanked Federal Executive for arranging the presentation on behalf of A.R.R.L. He referred to the technical aspect of this moonbounce achievement and to the immense amount of time and effort necessary for its accomplishment. Photographs and slides of Ray's set-up at Birchip were viewed later in the proceedings and an appreciation of the complex "tracking" devices was gained.

During this presentation and other formal parts of the Dinner, reference was made to the fine spirit of co-operation and liaison which existed between the State Administration of the Department and the VK3 Division, and between the W.I.A. Federal Executive and the Central Office, P.M.G.

All concerned agreed that this moonbounce effort was yet another fine example of Amateur Radio achievement and the W.I.A. joined with the P.M.G. Department in congratulating VK3ATN on being the joint recipient of one of Amateur Radio's most highly prized awards.

SWL

Sub-Editor: D. GRANTLEY, WIA-L2022
P.O. Box 222, Penrith, N.S.W., 2750

TAPE RECORDING

Recently the Postal Department made some changes in the postal charges and in an obscure corner and with little publicity is an item of very great importance to the tape recording enthusiast, specially those of our number who have many overseas tape contacts. A system known as **Phonopost** has been introduced. This service is provided for the overseas (only) transmission of tape, wire and disc recordings bearing messages of a current and personal nature. The sender may enclose a printed notice relating to the method of playing the recording. In order to use this service you must not seal the container or envelope, but it can be fastened with tape, although I use a single brass clip. The word "Phonopost" should appear in large letters near the top left of the address.

So much for the conditions, let's look at the benefits. Cost for overseas surface mail is 6 cents per 2 ozs. or part thereof, and they can be sent by air mail for the rate applicable to the "Other Article" air mail rate to the country of destination. How does this affect us? Well, take a typical example of a message tape to England. These weigh almost 2 ozs. and under the old system would have cost 9c. Now they cost 6c. But it is in the air mail rate where the benefit really occurs. The same tape to England by Phonopost air mail now costs 35c, whereas it formerly cost one dollar. The service is not available to all countries, some of the more notable ones which do not subscribe to the system are Spain and Spanish Colonies, French Territories and France, Canada, India, Iron Curtain countries and the Philippines. If you have any difficulty in using this service, refer the officer in question to statement 10 on page 11 of the New Postal Rates and Conditions booklet just released.

OVERSEAS LISTENERS

Meet Edward Hamill, 27 years old electronics worker from Millbrae, California. Using an SX-111, Ed has mounted the impressive score of 326 countries heard in all zones, however like many of us, he does not send out a lot of cards, and to date had 151 confirmations in 36 zones. Other hobbies include stamp collecting, card swapping, and tape corresponding, the latter is made possible with the use of an Ampex 840 recorder. If there are any S.w.l's in either VK4 or VK1 who would care to swap their cards with Ed, I will be only too pleased to pass them on.

BAND CONDITIONS

Outstanding news at the moment is the condition of the 10 metre band, particularly over the week-end of the A.R.R.L. Contest (Oct. 21). I am indebted to Mac Hilliard for an excellent tape of some of the highlights of that period. 15, and of course 20, still produces the majority of our DX. The 6 mx band has shown signs of life these past few days, with openings between JA and VK4.

I have noticed a remarkable improvement in the 6 mx band at this QTH (Hazelbrook, N.S.W.), and the VK2 broadcast, also the v.h.f. version last Sunday were heard for the first time 5 by 9.

Down to Peter Drew at Balcombe in Vic., where the DX treated this keen listener really well in the VK/ZL Contest. I am not able to reveal his exact score, but let me say that in 17 years I have never known a larger one.

DX NEWS

Recently, I promised a list of stations whose QSL chores were under the control of John Cummings, W2CTN, whose address is 159 Ketcham Ave., Amityville, 11701, New York. As there are over 100 in this up-to-date list, I will have to spread it over several issues, but here are a few to start with:

CN2BK, CN8FE/FW/GB/GC, CP1EA, CP-1EA/5, CR3KD, CR4AH/AX, CR6DX, CT1NW, CX9AAN, DU1OR, EA2AT, EL5A, EP2RW, FA3CT, FA9UO, FG7XK/XS, FK8AH/AI/AT/AW, FM7WU, FS7RT, FY7YG, GC3MWR/PO1/SHZ, GM2YY, HB0SJ, HB9AET/HZ, HC1GC, HC4IE/IM, HI8MMN/XAG/XBG, HK1AAF, HK-3LR, HK4RQ, HK6LR, HK6RQ, HK0RQ, HR-2FG, HS1JB, KA2DF/JH/KD/LD/RC, KB6CY, KC4USA USK, KC6AA/FM, KG4AM/BX, KG-6APR, KR6BQ/JZ, KW6CU/EJ, KZ5LC, LX-3AA/AB, LX0AA/AB, LX3KP, MP4BFK/MAH/QBG, OA7F, OE9DZ, OH2AM/OH0, OH-2BH/0, OH2EW/0, OH5TW, ON4QJ/3AO, OX-3BZ/KC/RH/UI, OZ3UD, PX1FO.

Remember fellows, John gives a lot of time to his task and does it well. When you send cards to him please don't forget the self-addressed letter and I.R.C's, this will take a little of the strain from him.

NEW SOUTH WALES NEWS

Following several exchanges on the subject of the handling of QSL cards, I have to hand a letter from the Secretary of the VK2 S.w.l. Group. I pass extracts of this letter on to you. These have been taken at random, but their meaning is not altered by doing this:

"The QSL system is being modified so that members will receive their cards with the minimum of delay. The new system will allow members to collect their cards from the S.w.l. meeting, and if they are not collected, then they will be posted free of charge to members at the end of every fourth week of every month. Members using numbers other than WIA-L numbers will be required to inform the Secretary of this, so as to determine their address. . . . I assumed the office of QSL officer in order to save double postage of cards. . . . The motion regarding payment of fee for postage was revoked at the last meeting, so we hope the delivery of QSL cards will be much improved from now on. This system should be in operation by the first of next month."

This is the basic message of the Secretary's letter to me. There are a few points I would like to bring to the notice of all listeners who could possibly have cards arriving via the Bureau, particularly non-members of the W.I.A. There are many S.w.l's in Australia for a known fact, who use W.P.E. and I.S.W.L. prefixes, to name a few, who are not W.I.A. members. Now it appears that the Group have no plans to cater for these chaps and this is within the W.I.A. rules. (I believe that Amateurs who are non-W.I.A. types can keep a s.a.s.e. with the QSL manager), however let it be placed on the record that I, in reply to this communication, and in the interests of other listeners, and public relations, have offered to handle all cards which arrive at the Bureau for chaps who are not members. This will apply also to interstate listeners whose cards drift into the VK2 Bureau. Provided it is carried out correctly, I feel this new system is excellent, and the overall result will depend entirely on those who do the job.

For the benefit of country members, and newcomers if any, I would like to briefly outline the manner in which cards reached us over the past few years. I refer to members who lived in the country, or didn't get to meetings. When I first came to VK2 in 1956, our cards came direct from the W.I.A. manager with our bulletin. Eventually, they were handled by the Group, when my good friend Chas. Aberneathy used to collect them, pass them out at meetings, and mail the country members' cards on to those who kept a s.a.s.e. with him. This, too, was quite okay. When Chas. resigned earlier this year, I offered to take the task on, on the condition that I was not expected to travel 70 miles to meetings, but to make amends for this concession (which by the way was granted), I undertook to mail at my own expense, all S.w.l. QSLs regardless of the fact that they were for members or non-members, or in which State they lived. A supply of s.a.s.e. were sent to the VK2 Bureau for any S.w.l. cards to be mailed to me. The first batch arrived and were sent out the same day. To this date no further cards have been received by me. Finally, the new system has been instituted, in fact I was not consulted, and I doubt if country members have been aware of the change over. I have refrained from any comment on this matter, and still do so, but I present the facts, as I believe all of our members should know just what has taken place.

QSL LADDER

Here is the latest I have, in the usual order, confirmations, countries heard, zones, states, Eric Trebilcock 293/300/40/50, Peter Drew 197/265/38/41, Don Grantley 174/307/39/35, Ernie Luff 152/224/37/38, Mac Hilliard 103/252/33/14, Alan Raftery 79/197/31/13.

That winds it up for this month chaps. Best of luck to all who enter the Ross Hull Contest. 73, Don L2022.

TO WHICH DO YOU BELONG?

There are three types of people: The few who make things happen, the many who watch things happen, and the big majority who have no idea what's going on.

Swiped from "Siran," South India Radio Amateurs Newsreel.

LOW DRIFT CRYSTALS

☆

1.6 Mc. to 10 Mc., 0.005% Tolerance, $5

☆

10 Mc. to 18 Mc., 0.005% Tolerance, $6

☆

Regrinds $3

THESE PRICES ARE SUBJECT TO SALES TAX

SPECIAL CRYSTALS: PRICES ON APPLICATION

MAXWELL HOWDEN

15 CLAREMONT CRES., CANTERBURY, E.7, VICTORIA

Phone 83-5090

LOG BOOK

IS NOW AVAILABLE

Larger, spiral-bound pages with more writing space.

Price 75c each

including Postage

Obtainable from your Divisional Secretary, or W.I.A., P.O. Box 36, East Melbourne, C.2, Victoria.

DX

Sub-Editor: ALAN SHAWSMITH, VK4SS
35 Whynot St., West End, Brisbane, Qld., 4101

Predicted sunspot number for December is 99. The future trend will be interesting. Conditions are good as of now. Are we near the top of the curve or is the best yet to come? How long will ten mx hold up? This latter band is open at this QTH daily from 2200z to 1000z. Mostly W and J prefixes, but the Europeans appear around 0900z. 15 mx is good to Europe from 1000z, often till 1600z. The usually good early night path (SR) to Europe on 20 mx seems loath to put in an appearance, but this band does improve to the NW from 1500z onwards when the signals are at S8/9 strength.

NOTES AND NEWS

Pitcairn Is.: Ron W3DWG/VR6 passes on the info that he will look for the VK boys on 14190 and 21350, 0530z. QSL K4YFQ.

Mainland China: Reported active and working lots of Ws is BY5PX. 21282 1200z. Says QTH is Peking and QSL to VU2LM. (I wonder —Al.)

Sao Tome: CR5SP 14195 0600z, 28630 1900z. QSL W2GHK.

Jersey: GC2LU QRV all bands daily. QTH, Flat 1, 14 Claredon Rd., St. Heller. Also active daily GC8HT. All bands and modes.

Easter Is.: CE0AE 14220 0500 and later. QSL Ham Shack, P.O. Box 37, A.P.O., N.Y., 09339.

Thailand: HS1HC 14105 1530. QSL to HS Bureau.

Hong Kong: VS6FS active 21030 1000z and 28030 1100z. He says will QRT in January and commence operation from Zambia with call 9J2NW. VS6FX and VS6FZ also sometimes on 10 and 15 mx c.w.

Curaco: PJ3CR 14175 0500z. QSL P.O. Box 569.

Franz Josef Land: UA1KED 14009 1300. Many seem to be seeking this one. Keep listening. He is on quite often.

Swan Is.: KS4CF QRV 14108 0630, 28600 1900. Also worked here on 21 and 28 mx c.w. QSL Box 463, Miami, Fla., 33157.

Ceylon: 4S7PB 14170 1500. Also 4S7NE and one or two others active on 14 c.w./s.s.b.

Sint Martin: PJ2MI 28600 1400. QSL VE3EUU.

Caicos: VP5AB 14162 0630. QSL W1WQC.

Aldabra: VQ9JW active on several freqs. 7005, 14080, 21080, 28600, 28080, 21440. Various times from 1600z. Also listens on 160 and 80.

Niger: 5U7AL 14165 2345. QSL W4WHF, L. Leper, 255 Suntan Ave., Saratosa, Fl., 33577.

Wrangle Is.: UA0KIP 14029 1835. No other information.

S. Sandwich Is.: LU2ZI 14200 0100z.

Botswana: ZS9Q 14047 1515. P.O. Box 45, Francistown.

S. Orkney Is.: VP8JD 14190 2300.

Swaziland: ZD5X 14020 1330z.

St. Helena: ZD7FF 14218 0000z. QSL W8UAS.

Tunisia: 3V8BZ is active again, 14195. QSL DL7FT.

Senegal Rep.: 6W8BE 14200 2230z.

Haiti: HH9DL 14288 0400z.

Reunion Is.: FR7ZF 14070 1300z.

Fr. Somali: FL8FP 21246 2000z.

Sudan: ST2SA 14021 1500. P.O. Box 224, Pt. Sudan. (What's happened to ST2AR?)

Gibraltar: ZB2BH 14210 0330z. QSL via ZB2A.

Tromelin Is.: FR7ZF/T 14026 1500.

Glorioso: FR7ZO/G 14026 and 14095 1150.

Vatican: HV3SJ 14205 1700. 14175 0630. P.O. Box 9048, Rome.

Togo: 5V1ZR QRV 14150 and 21350 1500-1800. More activity from here coming up.

Galapagos: HC8JG 14172 0000z.

Bay Is.: HR6EB 14205 2230.

Marion Is.: ZS2MI 14230 1700. Uses a.m. phone and still reported as active.

Christmas Is.: VK9DR 28600 0600z. Uses other bands—VK6RU can supply further info.

Guernsey: GC8HT daily active using all bands and modes. Always a good signal here.

Mexico Oaxaca City: XE0OPC. An Archaeology Expedition, 14 s.s.b. 0030 and later. QSL K5OPC.

Rio de Oro: EA9AQ 28500 1600, 21030 also 1600, 14166 2015. EA9EJ 14125 1830.

Svalbard: JW5YG 14009 2245.

Jan Mayen: JX2XF 14164 0700, 14065 2100.

Gordon W8IDB has written seeking assistance. He is particularly anxious to work VKs especially VK3s. He is on every morning at 5 a.m. Eastern Daylight Saving Time (U.S.) and listens between 14200 and 14230, but he can work any band from 10 to 80 mx, mode is s.s.b. If you hear him, please give him a call.

ACTIVITIES

Peter VK4PJ is a busy family man but usually finds time to snare his share of DX. He reports working the following: 10 mx s.s.b. —4X4CJ, HC5CQ, OE1KW, UF6ACR, LX1RB, F3II, HB9AKJ, EP2GI, ON5KY, VS6FZ, UB-5KMX, ZC4CN, PA0LX, EP2BQ, 7X0AH, VE-7AHG, YV5ANE, HP1JC, UF6ACI, OH6WY plus several VEs and many other Europeans. 15 mx—YV5CMZ, ON4ON, OH2BCZ, PA0LX, W0GTA/LA, SM5API, ON5KY, UA3KBO, F3II, EP2BQ, ZC4CN, OZ5KG and Europeans. 20 mx—UR2KAW, F2MA, HB9ABM, OK1FV, TI-2PZ, 5Z4KL, CR6IS, EI9Q, VE3WT, VS9ARS, UY5XS, VP2AZ, 9Y4VP, 7X0AH, 9E3USA, VP6WR, 9Y4AR, JA0IA, HK5AZA, CX3BH, GI3SLE, UW3VT, YO3LM, UP2OK, HR1KAS, YS1AG, OA4BS, KZ5TW, HC5NW, 5Z4KN. Peter says conditions on all bands have been excellent. Thanks OM.

Chas VK4UC busy working all the DX he can and reports 20 mx in fine shape. On c.w. CE3EX, CR6CK, GM3JZK, OA5W, CT1OI, EA-8FJ, VQ9B, 4U1ITU, AP5HQ, CE8CF, VK5XK/2 Lord Howe, DK1DH, PA0VO, FM7WO, EI5BH, CR4BB, VP8JG, YU1XID, PY2OU, LA6U, etc. S.s.b., VK4HG Willis Is., VK9XI Xmas Is., VR1L, W3DWG/VR6, ZC4CB, TI2HK, HS4AK, XW8AX, EP3AM, IT1ZGY, IS1VAZ, HR1KAS, CR4AJ, HK0AI, EA3NI, ZS5PG, GI4RY, VK0CR, VP6RG, 9Y4LF, KZ5FN, ET3REL, AP2MR, ZE8JW, FH8CD, UR2KAW, CR6BX. Most of the above worked between 0500z and 1300z. Chas reports making DXCC mixed in four weeks. Remember the days when 100 countries was a BIG achievement—now it's a piece of cake.

Ken VK3TL, who never misses much, notched these 20 mx: CE0AE, EL2E, EL2T, HR6EB, VP2VV, 4M5A, 5H3KJ, 9L1JJ. QSLs rcd. OA8V, 5U7AC, YA5RG, 5N2AAX, 5N2AAF, CR7GJ. QTHs: 9L1JJ G3HZP; VP2VV KV4CX; CE0AE WA5PUQ; EL2E, EL2T, P.O.B. 1425, Monrovia. (Thanks Ken.)

Dud VK4MY writes to say conditions are continually on the improve. Now working mainly s.s.b. 20, he lists these as worked: VE1RD, UC2AA, LZ1BZ, CE0PC (QSL to DL-9KRA), EA8FG, VE8WT, FO8BT, 5Z4KL, 3B8BZ (QSL DL7FT), YJ8BW (QSL W4NJF), 9G1FF (P.O.B. 1387, Kumasi), UV3TP (Gorky), VK0CS (Mawson), ZS5XA, OX3BX, HP1JC, HV3SJ, UB5SR, UB5KMX. On c.w.: IT1MNG, GM2HCZ, GM5AHS, UW0FW, PI1KMA, FW-8RC, VE8CC, PZ1CQ, 4U1ITU, CE8CF, VO1FB. Mostly between 0700 and 1200z.

Al Rechner, VK5EK, reports a feast of DX on 28 Mc. During the VK/ZL on this band he logged 30 countries plus and some 150 QSOs in a few hours. Some landed were 5Z4KN, HM1BB, ZC4CN, 4X4BL, OD5EY, OK1VK, OZ4FP, CT1LN, LA1KI, UC2AA, G3HCU, 9V1NT, OF2AM plus several Gs.

SOME QTHs

AP2NMK -Via W8QWI.
ZB2BE -Via K1OTA.
TA4EK—Via DJ4EK.
TA2FM—Via DJ2PJ.
TA1SK—Via DL2OE.
CT2GF—Via W4VPD.
ZC4MO—Via WB2ZMK.
ZD3G—Via K6ENX.
ZD7DI—Via R.S.G.B.
ZD8HAL—Via K0ETY.
PX1NV -Via WA9HJM.
EA8CB—Via DL7FT.
EI3SU—Via G3KMI.
FM7WO—Via WB2SSK.
FP8DI—Via WA9PYY.
AP5HQ—Signal Training Centre, Kohatt Cant., West Pakistan.

Can anyone help with the following: ZB1AS, VR1C, MP4BFL, VS9OSC, VS9ADF, VP5AY. If so, please drop Barry VK5BS at 18 Cornish St., North Glenelg, 5045, a line.

AWARDS

The following might prove to be topical as its creator is very much in the world DX news at the moment.

The Colvin Award is issued by Iris and Lloyd Colvin, of W6KG-Yasme fame, who are currently operating from Africa.

To obtain this award it is necessary to work PAIRS of land based stations licensed to the same family under the following conditions:

(a) Three pairs of stations with each pair located in a different continent, or
(b) Four pairs of stations with each pair located in a different country per A.R.R.L. list, or
(c) 10 pairs of stations with each pair located in a different state of the U.S.A.

Separate sticker endorsements are available for each of the above categories. QSLs to be sent to W6KG, 111 Purdue Ave., Berkeley 6, California.

CONTEST CAPERS AND COMMENTS

The 1967 c.w. VK/ZL Contest just past went off like a New Year's Eve Revelry, i.e. the usual cacophony of sound and QRM. Fast and slow fists all vieing for space in the crowded spectrum. Generally speaking, the battle was conducted with the utmost fraternalness and in the spirit of the thing. There were, however, as happens in all such contests, some gross examples of bad operating and sportsmanship:—

The VK who worked the VK DX-peditioner and called CQ continually on his frequency. The SM who, after working a VK9, called CQ four times through a horde struggling to work the latter. The "big gun" who zero's in and takes over from the smaller fry when the latter is running through a good string of DX QRZ. These are but a few samples. Another bad operating technique is the over-use of BK-BK on QRM freqs. To have two or three doing this on the one freq. without adding the call sign only adds to contest confusion. QRM, of course, is part of the scrap. We're in it to win it and not bow politely to one another—but ethics must remain.

It seemed that rare DX and VK participation were down a little this year in the c.w. section, even though overseas participation in general was up. The R.S.G.B. 21 and 28 Mc. phone test was listed for the same week-end and this no doubt to some extent divided the participation.

If one takes a look at the World Wide Contest Calendar, it appears now that week-end sharing of contests will soon be the order of things.

Let me gratefully acknowledge the assistance given by overseas Editors during this past year of 1967: Dr. Howard Klein, of "LIDXA"; Geo. Studd, N.Z., "Break-In"; Gene Sykes, "Fla. DXer"; Geoff Watts, "News Sheets"; Jim Coote, "Air Waves"; Rod McNicoll, VE3FXR and others.

On the local scene, my thanks also to those who keep the column in mind: VKs 3TL, 4MY, 4DU, 4UC, 4DV, 4PJ, 5BB, 3QV, 5BS, 3AMK, 3AKN, 4VX, 4ZO, 2NS, 8HA and lots more.

In order, is a special mention to Chas. VK4UC who weekly has never failed to keep me posted on DX doings.

The Season's Compliments to Reader and Contributor alike. May '68 be Great—for DX. 73, Al, VK4SS.

— . . . —

CONTEST CALENDAR

9th Dec., 1967, to 14th Jan., 1968: Ross Hull Memorial Trophy V.h.f. Contest.
3rd/4th Feb.: John Moyle Memorial National Field Day Contest.
3rd/4th Feb.: 34th A.R.R.L. International DX Competition (phone), 1st week-end.
17th/18th Feb.: 34th A.R.R.L. International DX Competition (c.w.), 1st week-end.
2nd/3rd March: 34th A.R.R.L. International DX Competition (phone), 2nd week-end.
16th/17th March: 34th A.R.R.L. International DX Competition (c.w.), 2nd week-end.

W.I.A. D.X.C.C.

Listed below are the highest twelve members in each section. Position in the list is determined by the first number shown. The first number represents the participant's total countries less any credits given for deleted countries. The second number shown represents the total D.X.C.C. credits given, including deleted countries. Where totals are the same, listings will be alphabetical by call sign.

Credits for new members and those whose totals have been amended are also shown.

PHONE

VK5MS	317/338	VK2JZ	292/307
VK3AHO	314/326	VK4FJ	279/296
VK6RU	305/328	VK3TL	262/266
VK6MK	303/320	VK4TY	257/258
VK5AB	300/314	VK2APK	256/259
VK4HR	292/308	VK2AAK	246/250

C.W.

VK2QL	295/315	VK3NC	266/286
VK2ADE	291/313	VK3ARX	263/271
VK3CX	291/312	VK4HR	263/285
VK4FJ	291/313	VK6RU	262/283
VK3AHQ	290/302	VK2APK	257/264
VK2AGH	282/295	VK3TL	251/254

OPEN

VK2AGH	311/329	VK4TY	296/308
VK6RU	308/331	VK2EO	295/316
VK2ADE	305/329	VK4FJ	295/318
VK6MK	305/322	VK3ARX	281/289
VK4HR	304/326	VK3TL	281/285
VK2VN	300/315	VK2ACX	276/300

VHF

Sub-Editor: CYRIL MAUDE, VK3ZCK
2 Clarendon St., Avondale Heights, Vic., 3034

NEW SOUTH WALES

Well another year has passed and by this time the 6 mx DX season will be in full swing. At least two of the 6 mx operators have already had early Xmas presents; these are 2ZDW and 2ZVL who succeeded in working into Japan during October.

The Group will once again be holding a Xmas Party and this year it is planned to stage the event at Dural. This is the first time that this venue has been used for this purpose and we trust it will be the medium of introducing the home of VK2WI to more of our members.

There has been little talk but quite a bit of back-yard action in past weeks as the v.h.f. fraternity prepare for the New Year Field Day. With stations ranging further afield each year, it is being consistently proven that v.h.f. coverage is larger than some Amateurs realise. For those stations who prefer to stay home, please remember that the contestants are travelling long distances and nothing is more discouraging under these circumstances than to listen to long conversations between home stations who fail to tune for field stations. It only takes a few minutes in every hour to exchange numbers with field stations.

Active stations may be found in Orange, Bathurst, Dubbo, Coonabarabran, Parkes, Forbes, Cowra and other townships. A W.I.C.E.N. exercise is anticipated in the near future in the Dubbo and Forbes district to gauge the effectiveness of the network under emergency conditions. Thank you, Brian VK2ZQX, for this information.

We are sorry to hear that, despite warnings regarding operating procedures, some official QSL cards have been received by a number of v.h.f. operators. Please bear in mind that your transmissions are heard by persons other than the operator to whom you are speaking and temper your remarks to those which you would normally make in mixed company. I think that all Amateurs realise just how much interest is shown in our v.h.f. bands by commercial interests, so do not do anything to jeopardise our claim to these frequency allocations.

On behalf of the V.h.f. Committee and myself, may I wish you all good things for the coming festive season and lots of DX. 73, Keith 2ZAU.

Hunter Branch.—144 Mc.: This band has been quiet but showed some life on the night of Oct. 16 when the band opened to Sydney and beyond, the longest contact for the night was when 2ZMO at "Raymond Terrace" worked 2TR at Bega, 30 miles from the Victorian border. 2ZSG and 2ZCT also worked 2TR. For the night, Bill 2ZWM worked 12 Sydney stations, 2ZMO worked 10. The following night conditions were nearly as good and Sydney stations were again worked.

52 Mc.: The band has been quiet over the last month, no DX has been heard but the band has showed some promise at times. New stations are 2ZFX, 2ZSG, 2ZGK, 2ZSI and 2AAM. On the whole, conditions have not been the best over the last month. Channel 0 has only been heard at times and at times it could have been Wagga. 73, Mac 2ZMO.

VICTORIA

Other than a couple of small openings, 6 mx DX has been almost nil, although 6 mx activity in VK3 is fairly high, especially on the a.m. net frequency of 53.032. A few strange signals have been heard on the low end of the band and between 48 and 52 Mc.

Two metres has not been that active, but stations appear from nowhere when a trace of DX shows up. During the month there was a good opening to VK5 extending across to Adelaide and a brief opening to Northern VK7.

Other activities in Melbourne which are still very popular are the 2 mx scrambles held on the second Sunday of each month at 2045 hrs. V.h.f. Group meetings on the third Wednesday at 2000 hours, and the 2 mx fox hunts on the fourth Wednesday at 2000 hours. Remember the Ross Hull Memorial Contest which starts in a couple of weeks and don't forget to send in your log sheets this year. The compliments of the Season and good DX to all. 73, Cyril 3ZCK.

Eastern Zone.—52 Mc.: Activity nil, but the m.u.f. running very high, up to 45 Mc. **144 Mc. a.m.:** The first extended ground wave DX for the season is with us again. 3ZGA 144.165 and 3ZCG 144.015 took advantage by working VK7 and VK5; George 3ZCG also heard 5ZDY Mt. Stirling, near Adelaide, 5 x 7 (15th Oct.) and Lee 3ZSS 144.125 heard a VK5 for the first time. Peter 3ZDP 144.080 at Sale, 140 odd miles East of Melbourne is looking for DX using a.m. (v.f.o.) and excellent s.s.b. **146 Mc. f.m.:** 18 stations now very active, using Channel A; 9 are equipped for B, 5 for C, and 2 only on Channel 1. During October, 3ZCG Morwell found a good 70 mx f.m. path existed up to Mt. Buller (5934 ft. 3ATC/3), and 3ZDP also found he had a good 100 m. path up to Mt. Buffalo (5645 ft., 3BX/3), but these two paths did not exist vice versa. 3ZCG also heard that day 3AJM Wangaratta. 73, George 3ZCG.

SOUTH AUSTRALIA

Ultimately the diligence and patient attitude shown by the VK5 v.h.f. enthusiasts had to be rewarded. On 11th Oct. between 1900 and 2130 S.A.S.T. the 6 mx band was open to the districts of JA. In all there were about 11 VK5s on the band at the time duly doing battle. Due to inexperience in the science of linguistics the rate of contacts per station was extremely slow. Nonetheless, the most was made of the opening. Signals during the opening were peaking S7 with slow QSB, not unlike the DX propagated by sporadic E. An interesting aspect of this DX opening was that it was previously predicted. However, reference to an article in "A.R." October issue, page 17, headed "Position of Planets Linked to Solar Flare Prediction," will yield that relevant details. In the midst of the JA signals Doug 8KK provided an S9 contact to those who wish to exchange pleasantries.

During the same period, 2 mx also provided some excellent openings. Numerous openings to VK3 have been recorded during October. The most prominent was noted on Oct. 15 when an area between Mt. Gambier in the S.E. of VK5 to Melbourne yielded numerous contacts into the Adelaide area. It was at the peak of activity that Ces 5GP, located at Nairne, and Tony 5ZDY, at Stirling, worked Den 7DK in Launceston at R5 S9. However, the majority of Adelaide stations had to be content with simply working into VK3. It is reported that Ces 5GP has worked 45 separate VK3 calls on 2 mx in recent weeks.

Although an increase of 432 Mc. activity is expected in future months, the only signals audible and visible on 432 Mc. belong to the t.v. group. Of interest is the colour t.v. signal emanated from the QTH of Maitland 5AO. Briefly, the equipment in use consists of a 3-tube vidicon fed into an encoder, constructed by another member of the group, namely Allan Nation. Reception is on the group's original colour receiver constructed from components imported from JA-land.

The mention of 576 Mc. activity by Rod 5ZSD and Charles 6LK, now resident in VK5, appears imminent, with a view in recapturing their previous record. 73, Colin 5ZHJ.

TASMANIA

6 mx: Activity on this band is still mainly confined to the net frequency of 53.035, but some stations have been heard working away from this frequency.

2 mx: Activity on this band has been on the increase due to the warmer weather. Peter 7ZPD has worked a number of Melbourne stations on 2 a.m. and Bevan 7ZBW has worked into Melbourne on 2 f.m. Also Den 7ZDK has worked into Adelaide.

A large number of high-band f.m. units have found their way into Launceston, and in the near future there should be quite an active net operating on Channel A, and eventually Channel B and C. 73, Brian 7ZBY.

— . . . —

ERRATA—VK3 V.H.F. CONVERTER

The circuit board and layout diagram published in November's "A.R." are not full size, also R3 and R4 have been interchanged on the layout diagram.

The converter committee regret that they cannot accept any more orders for kits for the 6 metre converter for the time being, but it is quite possible that more kits will be made available when the 2 metre and 432 Mc. converters have been established.

Why specify PrecisionWindings' printed circuits?

As Australian industry moves into an electronic era new applications for printed circuits are developed every day . . . and design engineers expect their printed circuit suppliers to be versatile and flexible.

Constant research and scientific evolution of production techniques at Precision Windings' plant assures first grade manufacture; even relatively small quantities can be produced economically.

PW's photographic process **does** have many advantages . . . definition is crisp and clear, negatives are readily available for alterations, quality control during manufacture is precise. This is why more and more industrial organisations specify Precision Windings printed circuits.

Delivery is prompt and prices most competitive . . . and advanced technical advice is yours for the asking. Ask for a "no obligation" estimate!

PRECISION WINDINGS

52 Cambro Road, Clayton, Vic.

Tel. 544 7370

FEDERAL AND DIVISIONAL MONTHLY NEWS REPORTS

(SEND CORRESPONDENCE DIRECT TO DIVISIONAL REPORTER NAMED AT PARA. END)

FEDERAL

FL2000 LINEAR AMPLIFIER

The following letter has been received from the P.M.G. Department, Radio Branch:—

Dear Sir,

Further to recent correspondence from this Department concerning equipment for the Amateur Service, would you please note that the operation of the Yaesu Musen FL2000 linear amplifier will be accepted as meeting power output requirements for single sideband emissions when such equipment is operated with the high tension power transformer employing the 440 volt secondary tapping.

Yours faithfully,
C. M. Carroll,
for Director-General.

REGION III. AND SOUTH-EAST ASIA

At the Hobart Convention a 2½-hour debate was adjourned "Sine Die" (to another day). This debate will no doubt be resumed at the 1968 Convention in Sydney, and will concern the policy that the W.I.A. should adopt towards Region III. and the I.A.R.U.

As a lead-up to that, Federal Executive was asked to prepare some suggestions for a policy to be adopted, and this has been done and circulated to Divisions as a **suggested basis** for W.I.A. policy towards Region III. and South-East Asia. As a **basis**, it is not meant to be complete, or final, but meant as a starting point. Please consider this problem and suggest any extensions or changes, any acceptance or rejections, to your Divisional Federal Councillor, or to Executive.

Preamble:

Executive has examined the matter of I.A.R.U. organisation on a regional basis and is of the opinion that at this time the resources of the Region would not support the sophisticated organisations which exist in Regions I. and II. We note with interest the holding of a Region I. triennial conference in Opatija, Yugoslavia; also the meeting of the Region II. I.A.R.U. Executive Committee in Salvador. Such methods of liaison and administration of the I.A.R.U. in Region III. may have to await an increase in the number of economically advanced countries, and an easing of currency restrictions by less developed countries.

Nevertheless, it is the opinion of Executive that greater liaison between I.A.R.U. countries in Region III. **must** occur, and that countries without I.A.R.U. member societies should be encouraged to develop an Amateur Radio Service, and seek admission to I.A.R.U.

Accordingly, the more developed countries in the Region II. should undertake the organisation of liaison and development activities in the Region, in conjunction with I.A.R.U. Headquarters, and the Region I. and Region II. administrations.

Proposals:

1. The W.I.A. is the logical unit for the implementation of any I.A.R.U. activities in Region III.
2. That assistance, either financial or by a more practical expression, be sought from the N.Z.A.R.T. and J.A.R.L.
3. In the event that either of these two societies is unable to make any contribution, the W.I.A., in conjunction with I.A.R.U. Hdq. follows through this policy.
4. The **basis** of W.I.A. assistance to South-East Asian countries to be the **Youth Radio Club Scheme** courses.
5. In order to establish initial liaison with I.A.R.U. member societies in the Region, a number of Y.R.C.S. courses be offered to assist the development of Amateur Radio in those countries which are I.A.R.U. members.
6. These I.A.R.U. member countries be encouraged to adopt a neighbouring country—in which no I.A.R.U. society exists—and to assist that country to develop Amateur Radio.
7. In accordance with this policy, Australia adopt Indonesia and attempt to establish an Amateur Radio Service in that country, providing Y.R.C.S. courses, help and advice in a concentrated fashion. It would be hoped that other I.A.R.U. societies could follow this example, the W.I.A. providing Y.R.C.S. courses to any I.A.R.U. member society who can place them in a neighbouring country.
8. W.I.A. Federal Liaison Officer and a member of Federal Executive visit the recipient country as needs determine and finances permit.
9. That prior to any I.T.U. conference of a Regional nature, which may concern Amateur frequency allocations, I.A.R.U. societies in Region III. liaise and determine a common policy to be adopted.
10. Headquarters of I.A.R.U. and other interested societies be requested to send a senior officer to Sydney Convention in 1968 (Easter) to assist W.I.A. Federal Council in formulating the eventual W.I.A. official policy on these matters.

— • • • —

FEDERAL QSL BUREAU

The following accompanies all QSLs sent out by HK5AOH: "During the course of our lifetime, we keep and preserve documents which remind and show us that in such a year we were born, vaccinated, married, promoted, applauded, received honours and finally retired from active life. This is of great value to us. The QSL card, which the Amateur finds in his mail box or under the door, is **his** document of a meritorious contact, evident proof that it was fulfilled. Without the QSL cards, there would not be DXCC, WAS, WAZ, or Diplomas of any species and the reward for valuable work would never be a reality. The active and hard working Amateur who keeps his equipment up to date and makes laudable international contacts is always awaiting the confirmative QSL. The QSL card makes me happy. Will you please co-operate by sending me **your** card? Thank you and I hope you will likewise be rewarded for your courtesy and consideration."

The Phillipine Amateur Radio Association (P.A.R.A.), which is the direct successor to the Phillipine Radio Club, founded in 1924 by Col. H. Roberts, KA1HR, well known to old DXers, is celebrating its 35th anniversary in November. A variety of celebrations are planned.

Further news from Tubby Vale, VK8NO, at Gove, N.T., reveals he has just returned from a trip south to view his first grandson, Timothy, the progeny of Jeff VK5ZP. Jeff is living at the home in Gawler and currently the VK5NO/ZP shack is used only to hang out nappies on wet days.

The VU2/4S7 DX Contest notification was received too late for inclusion in "A.R." for November. The phone section was held on Nov. 18 and 19. The c.w. section is scheduled for 0600z, Saturday, Dec. 2, to 0600z, Sunday, Dec. 3. Logs go to Contest Committee, P.O. Box 907, Colombo, Ceylon. Details of rules and awards may be obtained from this Bureau.

At last the J.A.R.L. have got the message on the new VK QSL Bureau set-up. It now only remains to whip Box 88, Moscow, and the A.R.I. into line and all major bureaux will be covered. Cards fell to 4,500 during October.

This Bureau extends its best wishes for Xmas and the coming year to all Amateurs and particularly to the outgoing and inward managers of the Divisional Bureaux.

—Ray Jones, VK3RJ, Manager.

— • • • —

NEW SOUTH WALES

COUNCIL NEWS

Council activities have for the most part been confined to the book work of the Division. The employment of a Secretary has meant that work in this field which has been unable to be performed due to limited time and facilities can now be completed. It is hoped that soon the result of this work will make the tasks of this and future Councils far easier than that of the past.

As yet no Councillor has been appointed to bring the Council up to full strength. Although well occupied during the past year, Council will have a busier than usual start in the new year.

Following on the Divisional Convention will be the Federal Convention which will be held in Sydney this time.

The President, Keith Finney, and Councillors wish to extend Christmas Greetings to all members for the forthcoming season, and would like to take this opportunity of thanking all those people for their help and courtesy during the past year and hope in some way that Council's efforts have been worth while. Councillors are, after all, only fellow members giving up much spare time in an effort to help Amateurs and their hobby.

OCTOBER GENERAL MEETING

The October general meeting was held at Wireless Institute Centre on Friday, 28th Oct., and an attendance of over 80 turned up to hear a lecture to be given by Maurie Brown, VK2OR, of Mullard Ltd.

The meeting was opened by President-Chairman, Keith Finney, VK2KJ, and followed the usual format of reading of minutes, etc. During the formal part of the meeting an additional 17 members were accepted and welcomed to the membership ranks. While membership is on the increase the rate of obtaining new members is still far too slow to achieve the large increase in members to realise a bigger and better Institute.

The lecture by Maurie was more of an insight into new present and future developments in the use of electronics in industry. Maurie had some very interesting samples to illustrate his talk as well as many slides on various topics. Maurie spoke on many and varied new devices and was restricted by insufficient time to give too many details.

On display was a 5 h.p. petrol engine which had an all electronic ignition system. The system used a piezo-electric device which when flexed mechanically by the timing cam generated the h.v. directly for sparking, no points or transistors being necessary. A similar element operated by a spring and release knob made up a gas lighter. As can be expected, these devices brought out questions and in reply Maurie said that the gas lighter should sell for a few dollars. Regarding the ignition device, Maurie said that the maximum switching speed was low and the h.t. fell rather poorly as speed increased, thus spoiling the device. He went on to say that the Repco-Brabham cars had the coil ignition but used a ferrite core saturated coil with a transistor fired primary. The saturation of the core held the output steady at low speeds while the transistor could well handle the high speeds; and although the coil point type ignition system was 30 years old, only recently had electronics been involved in this area. As an example, Maurie said that by pre-magnetising the cores only half the primary turns were required and this alone raised efficiency considerably.

While speaking on cars, Maurie went on to say that the new U.S. made V.W. would have electronic fuel injection controlled from the exhaust in such a way to ensure complete combustion without pollution.

Because of air pollution by combustion engines it was now certain that electric traction was for the future. To illustrate this point, graphs were shown of efficiency curves of motors and batteries under various speed and operating conditions. Taking a power source of 700 lbs. weight the lead-acid battery could give 8 kWH., the newly developed zinc air cells 49 kWH as opposed to the petrol engines' 120 kWH. In spite of poorer performance, these power sources had a place at present, and development of new systems of traction were needed to use the limited power available for best use.

In this area, G.M. have developed a traction system using thyristors to vary the frequency of supply to a synchronous motor, thus bypassing the series d.c. motor and its wasteful starting system. The Japanese Toshiba Co. has developed an experimental d.c. motor without a commutator by using Hall effect devices to control thyristors (SCR's).

SILENT KEYS

It is with deep regret that we record the passing of the following Amateurs:

VK2BCR (ex VK3CR)—
J. K. (Ken) Ridgway.
VK3WC—Ewen Cameron
VK6DR—Bill Wedemeyer.

JUST ARRIVED– **NEW 1967 EDITIONS!**

★ THE RADIO AMATEUR'S HANDBOOK

The standard reference work and text for everyone—Hams, Experimenters, Students, Engineers, Lab. Men, Technicians.

BY A.R.R.L. PRICE **$6.10** posted

★ THE RADIO HANDBOOK–17th Edition

Tells how to design, build and operate the latest types of Amateur Transmitters, Receivers, Transceivers and Amplifiers.

BY ORR PRICE **$13.45** posted

ALSO AVAILABLE–

★ THE RADIO TRANSISTOR HANDBOOK

This up-to-date Handbook covers a wide range of communication for both Amateur Radio and Commercial Applications.

BY STONER & EARNSHAW PRICE **$6.65** posted

McGILL'S AUTHORISED NEWSAGENCY

Established 1860 183-185 ELIZABETH STREET, MELBOURNE, C.1, VIC.

"The G.P.O. is opposite" Phones 60-1475-6-7

FOSTER DYNAMIC MICROPHONES

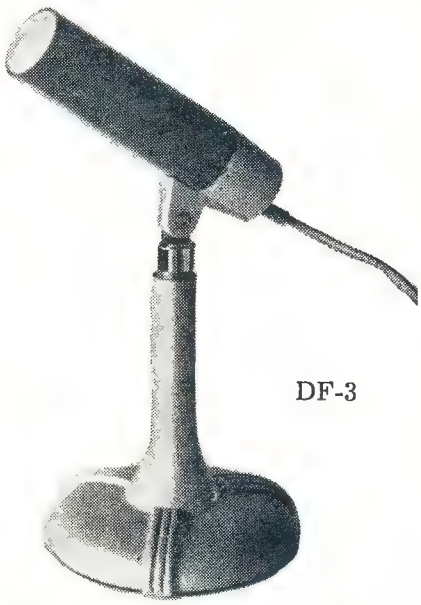

DF-3

SPECIFICATIONS:

Output Impedance .... 50 ohms or 50K ohms
Effective output level .... —55 db. [0 db. = (one) 1V. Microbar]
Freuency response .... 50 to 15,000 c.p.s.

OMNI-DIRECTIONAL DYNAMIC:

Plastic Diaphragm.
Size: 4½" long, 1¼" diameter.
Cable: 12 ft. of P.V.C.
Swivel fits ⅝" 26 t.p.i. Stands.
Colour: TWO-TONE GREY.

Retail Price 50K ohms: $9.60 + Sales Tax $1
Retail Price 50 ohms: $9.40 + Sales Tax 98c

A QUALITY PRODUCT FOR TAPE RECORDERS & P.A. USERS

ZEPHYR

Marketed by **ZEPHYR PRODUCTS PTY. LTD.**

70 BATESFORD ROAD, CHADSTONE, VIC., 3148 **Phone 56-7231**

Manufacturers of Radio and Electrical Equipment and Components

Agents: W.A.— D. K. Northover & Co.; S.A.— Neil Muller Ltd.; Tas.— Homecrafts (Tas.) P/L.; N.S.W.— Jacoby, Mitchell & Co. P/L.; Qld.— T. H. Martin P/L.

The point being made by Maurie was that electronics are making tremendous advances in all engineered devices and that these advances in semiconductor technology will help the Amateur in many ways.

Maurie demonstrated some semiconductor products and spoke about the development of silicon diodes and thyristors. A useful idea was put in that if a diode such as OA210 is connected across the coil of an electric petrol pump (in the correct polarity of course) then the contacts in these pumps will outlast the life of the car! Maurie said that the automotive manufacturers should include this item in the pump assembly but said that they probably didn't know about the idea. However the use of silicon diodes with alternators in cars resulted in cheap high current diodes for Amateur use.

Continuing, Maurie went on to Integrated Circuits and said that the transition to these devices was more dramatic than the advent of transistors and the introduction of these devices would mean that the electronics man of today must think in this new language and not in the language of valves which have just been left behind. The fact being that electronics is entering a new complex and exciting future.

This lecture proved very interesting to all present and difficult to describe in a few lines. The vote of thanks was moved by Dave 2BSJ, who thanked Maurie for this interesting evening and a suitable acclamation by applause was carried.

The meeting was closed at the end of the lecture at 10 p.m., when supper was served and the gang descended on Maurie and his samples to ask many more questions and look at the goodies which contained, among the many items, the latest locally made transistorised turret tuner for television sets of local manufacture.

The general meeting this month will not have the usual lecture, but will instead be a film evening. The feature film will be about television and is reputed to be a popular and very well produced item. Harold Burtoft assured "A.R." that the films will be of good quality, being much better than last year's lot, employing such things as sound and pictures at least more often than in the past.

Harold has suggested that next year one meeting be given over to an exhibition of home-brew gear to be briefly described by the builder. If you would like to be in it and have a suitable gadget to display and describe, would you contact him.

W.I.C.E.N.

The W.I.C.E.N. group of the N.S.W. Division held a 24-hour exercise on 20th and 21st last in conjunction with the Colo Shire Civil Defence Organisation. The exercise was held in the Windsor-Kurrajong area, with the control station being at the Wilberforce Council Chambers and mobile stations placed at stategic points at Colo, Weeney Creek, Bilpin, Bowen Mountain, North Richmond and Clarendon.

Channel A was used for this event and in all cases direct communication was affected and maintained throughout.

ANNUAL DINNER, 1968

The Annual Dinner of the Convention for 1968 will be held at Windsor Gardens, 258 Mowbray Rd., Chatswood, a place well known on the North Shore of Sydney for its excellent catering and service, and Council feels confident that those attending will be pleased with the choice of this venue. It is used all year round for conferences, etc., requiring good taste and warm and comfortable surroundings. The service is very good, the meals well served with generous helpings for all.

DURAL TRANSMITTING STATION

The transmitters recently delivered to Dural have created some interest and a brief description is in order. The transmitters consist of an r.f. unit capable of 500 watts aerial power output. Some delay is being experienced in the installation of these transmitters and other equipment at Dural due to the lack of three phase supply, which at present is not available from the Council mains. The position should soon be rectified.

LECTURE CLASSES FOR A.O.C.P., 1968

Those intending or contemplating to sit for the A.O.C.P. examination next year are reminded that the classes at Wireless Institute Centre, Crows Nest, start in early February and early booking may be necessary this year as the number of places is quite limited. For those unable to attend in person, an excellent correspondence course is available. Enquiries should be directed to the Class Supervisor at W.I.C.

OBITUARY

J. K. RIDGWAY, VK2BCR (ex VK3CR)

We regret to record the death on Tuesday, 17th October, of J. K. (Ken) Ridgway, VK2BCR.

Ken first joined the W.I.A. in July 1941, and was soon engaged in Institute affairs. He was co-opted to the Victorian Divisional Council in April 1942 and elected Vice-President during the same year. In 1943 he convened a sub-committee to form an Experimental Laboratory, and in 1944 joined a committee to organise an Amateur Emergency Network.

While engaged in all these activities, he found time to act as one of the instructors conducting W.I.A. classes for those who proposed joining one of the Armed Services as W/T operators. He also constructed a number of audio oscillators which were hired out by the W.I.A. to those wishing to practice the code at home.

In 1942 he joined the staff of "Amateur Radio" as Technical Editor and also gave a great amount of assistance operating the duplicator, co-relating wrapping and addressing.

When licences were re-issued, Ken took out his call sign of VK3CR in January 1946. "Amateur Radio" became a printed magazine again in October 1945. Ken retained his position of Technical Editor until February 1948, when the pressure of business compelled him to resign.

He was one of the partners in the firm of Precision Electronics in Melbourne. When International Resistance Co. bought out Precision Electronics in 1964, he was appointed Chief Mechanical Engineer to International Resistance Company and moved to Sydney, where he took out the call sign of VK2BCR.

In June 1967 Ken had to resign from business activities due to ill health. Although his health improved slightly, his illness finally caused his death in October.

The W.I.A. extends to his bereaved wife, Jean, and daughter, Christine, deepest sympathy in their sad loss.

Bill Henry's comment summed-up the Institute's feelings when he said, "He was a real white man and one of nature's gentlemen."

BILL WEDEMEYER, VK6DR

It is with regret that we have to report the passing of another of our radio fraternity in the person of Bill Wedemeyer, VK6DR. He died at the early age of 39 and leaves two children, a son of 17 and a daughter of 10.

He was originally a diesel mechanic, but gave that away and joined the P.M.G. Dept., of which he was on the staff at the time of his death. He got a limited licence in 1958 and soon afterwards obtained his full ticket.

To his wife and family the Institute extends their sympathy in their loss.

GEORGE GROVES, VK7XL

George Groves passed away on 7th October, 1967, at the age of 56 years, and looking back over the years, not so dim, there are many incidents which can be recalled.

He spent most of his life in Devonport and was quite a brilliant scholar, concluding his education at the High School and entered the employment of the Union Steamship Co. of New Zealand in Devonport.

A great interest in radio developed and around 1929/30 a number of chaps got together to form the Devonport Radio Club under the call sign of VK7DR. The transmitter was a pair of 210s in push pull Hartley circuit, modulated by a pair of 250s in push pull—the results on 220 metres were excellent until the oscillator became unstable and the P.M.G. requested a crystal controlled transmitter. George, with another, came to the fore and re-built the rig into the familiar 47 c.o., 46 buffer and a pair of 46s in the final.

About 1935, George was transferred in his employment to Melbourne where he used the call sign VK3XA, having taken out a licence in Tasmania in 1936 using VK7XL. He operated on all bands with phone and c.w. and managed to make some large scores in the then Fisk Contest. Great interest was also taken in 5 metres, although working other stations was extremely difficult—no other Hams in that area.

With the years came the Second World War and George, now married, was stationed in Launceston where he still operated VK7XL. The inevitable enlistment followed and he was in the R.A.A.F. and was stationed for a long time at the Technical College, Melbourne, where his knowledge was of great use, and later spent some time in New Guinea. The subsequent demobilisation followed and George was back in Launceston, but was transferred back to his home town, Devonport.

Six metres interested him and during those early years on the very high frequencies, he worked many stations all over Australia, New Zealand and Japan, a first VK7/VK2 came up during those contacts. Although interest in radio never waned, during those years he was keenly interested in surf live saving and was a prominent musician on a number of instruments although he preferred the piano, he conducted his own dance band and was playing all his life.

Those who knew him of late years were familiar with him on sideband with a Swan 350 and rotary cubical quad. His interest in golf occupied many enjoyable hours and it was here, on a golf course, where George went to meet the Great Operator.

Well, as Christmas nears again our thoughts turn to things which we take for granted. We can ask many questions of ourselves, among which will be: Have I helped the Amateur cause? (Next year will see a new Federal body which will want the support of every Amateur since indications are that the Amateur will soon have to justify having the bands he now enjoys.) Have I been courteous on the bands? Have I helped the new operator? What about that pest of a kid down the street and his questions? Well, it's your job. Do your best. Merry Christmas and a Happy New Year. 73, Stan 2ZRD.

HUNTER BRANCH

Outstanding weather and an excellent attendance ensured success for the Branch Field Day held this year on 15th Oct. The highly salubrious location at Bolton Point was again used (must get in a plug for the old home town). After a later than usual start, the programme of hunts and other activities commenced. Tony 2ZCT had some cunning hideaway for the first one and he fooled them all, for a time at least. Then came another event, this time on 40 when David 2BSC, Jan 2BJO and Bruce approached what might be described as low trickery to conceal the rig. Using such remote control devices as pieces of string and satellite relay (their explanation, not mine) they put on a very powerful signal which almost defied location. Those with transceivers did some ever decreasing circles for a bit looking for the signal but we, the good old 7 meg. Command mob, had no difficulty in hearing it. What's 10 kaycees anyway? I can't tell the difference! Anyway, the outcome of all this was a win for Bill 2ZCV who beat Les 2RJ by a short head so the binocular clutching tic-tac men tell me.

After lunch it was on again. Notwithstanding the fact that the rules dictated that the aerial should be wholly supported by the vehicle, the event attracted a good field. My own secret weapon for this one didn't arrive in time or else I'd have been unbeatable. Anyway, Les 2RJ beat me to it this time, making 13 contacts in the half hour or so. Just as well I didn't give him a quiz paper or he'd have taken that as well. In fact, the quiz was divided into two sections this year with an especially hard bit for the licensees. John 2ZPQ, a visitor from Sydney, took this one, while Neville Threlfo outsmarted them all again in the second division. The ladies were not forgotten either and Mrs. Branston, a close relation of Mrs. 2RU, knew nearly all the answers. Imagine what sort of a fiend would ask questions about the unit of currency in Afghanistan. Probably owns one of them hawks! The poor ladies were most bewildered. Later Mrs. Branston told me that she was having second thoughts about entering the quiz at all. One can be lucky, can one not?

In the later afternoon a most interesting contest developed among the 2 mx boys when Tony's crew again went a-hiding, but this time with three tx's! They used caves and all those tricky places to hide the r.f. The result was another win for Les 2RJ who found all three in the time allowed. Some of the gear being used was clearly developed for this occasion and flexible drives and angle gears

were the order of the day. For this type of thing, Ray McCook would nearly take the biscuit with a most professional looking array. Of course those intrepid hunters, Paul 2ZPJ and Vince 2ZOD, also had a great collection of the where-with-all in their four-wheel drive vehicle, as the A.B.C. says.

And so the field day came to a close with prize-giving performed by David 2BSJ who came all the way from his council duties in Sydney with Peter 2AXJ to represent the Division. Of course, as well as these prizes there were others for lucky numbers and Y.R.S. blindfold tx hunts and all that, but the big mystery of them all was solved when it was announced that Tony 2ZCT had won the constructors' prize. This was awarded to the gear, which, in the opinion of the audience at the October meeting, most deserved high praise.

Tony described a transistor two metre tx with a high power valve final. Others in this contest were Bill 2ZWM, who showed some fancy 6 mx gear; Mac 2ZMO, with a field strength meter; Jack 2JE, with a universal test set; and Gordon 2ZSG, who told us all about a transistor tester.

By now every one of you should have chosen a suitable present for Santa to bring. I have asked for a 6 mx converter since I reckon that I'll be needing it to work all that DX in January. There'll not even be time to go to the meeting! Another reason for this is that there isn't a meeting in January, but we'll all be back again if we can drag ourselves away from the v.h.f. DX on Friday, 2nd February, 1968, in room 6 in the Clegg Building, Newcastle Technical College, Tighes Hill. Have a happy festive season and keep up the good work and use all the bands you can. See you all again after the holidays, so until then, Christmas and New Year 73, 2AKX.

CENTRAL COAST RADIO CLUB

Simplified transistor circuit design and ham radio in the early days were the topics for two talks given to the members at the October meeting. Lindsay 2ON enlightened many with his transistor circuits and design techniques. Ern 2EH, with the help of a tape made prior to the meeting, brought back the early days of "hamming". Unfortunately, due to sudden sickness, Major 2RU was not able to give his intended talk on development of communications over the years. Everyone wishes Major a speedy recovery.

Activity on 2 mx is on the increase with some half dozen on the air in the district. Alec VK2AAK has taken to "moon bounce" projects, and is in the process of building a special rhombic antenna for 2 mx. 73, Bill 2TS.

— • • • —

VICTORIA

COUNCIL MEETING

Council met on 23rd Oct., all members excepting J. Taylor being present.

The following new members were admitted to the Division: VKs 3ZGX, 3ZFK, 3AHV, 3ZJC, 3OI, 3ZXR, 3ZZN, 3ZZW, and 3UB as full members with Associates A. D. Baker, H. Chittock, P. R. Forbes and R. A. Eldred.

A long discussion was held on the troubles being experienced with the official station 3WI. Peter Ward has volunteered to organise a party to do essential maintenance on the equipment, and to facilitate this work, Peter has been appointed Assistant Technical Officer. It was decided to form a technical committee headed by John 3FE to investigate and report to Council on the defects and failings of 3WI, and to recommend a suitable course of action to effect improvements. John is free to select the members of the committee. John 3ZEL is to act as liaison officer between the committee and the technical officers.

Discussion was also held on the subject of the proposed Worked All Victorian National Parks Award. It was resolved that the President and the Secretary formulate the rules and inaugurate this award.

Other matters considered included the problems of obtaining permits to erect towers in the municipality of Waverley and Federal matters, neither of which were finalised.

It was decided to abandon the practice of holding the Annual Xmas Party. Among the reasons for this action was the fact that far too much work fell on too few people, the cost was not warranted, and the rooms are not a suitable location for such a function. We will, in future, hold a normal monthly meeting in December.

GENERAL MEETING

The general meeting was held at the rooms on 1st Nov. when Mr. R. Humphreys, of Defence Standard Laboratories, spoke on power supplies. The Secretary outlined the proposal for the W.A.V.N.P. Award and a number of suggestions were made by members present. These will be taken into consideration when the rules are being formulated. Although the meeting was closed at 2230 hours, the stragglers did not leave until just on midnight.

The December general meeting will be addressed by Robin Bailey, VK3ZAO, whose subject will be "Ionospheric Predictions".

INSTITUTE OF RADIO AND ELECTRICAL ENGINEERS

RADIO FOUNDERS' DAY ADDRESS

12th December at R.M.I.T. Radio Lecture Theatre at 8 p.m.

Speaker will be Dr. W. A. S. Butement (VK3AD), subject will be "The Amateur in the Development of World Radio and Electronics."

Members of the W.I.A. are welcome to attend, but as seating space is limited, intending visitors are requested to phone or write Mr. A. G. Pither (VK3VX), 3 Riversdale Court, Hawthorn, 3122, for an official invitation.

EASTERN ZONE

I must commence these notes with an apology for lack of notes in Nov. issue; my fault, don't blame our Editor. During Oct. some enjoyable QSOs with mobiles travelling through the Zone were made by the 6 and 2 mx operators. Gordon 3TH, of Yinnar, appears to be making a come back on the bands. We welcome to the Zone Trevor 3ZGA, of Newborough, who has recently been issued with his call sign. He has a big signal on 144.165 Mc.

Zone's first W.I.C.E.N. meeting was held on Friday evening, Oct. 6 at QTH of 3QZ. George 3ZCG reported the doings of the Zone v.h.f. wise at V.h.f. Convention at Geelong on 7th and 8th October. Harold 3AFQ and Ken 3ACS made a trip to Lindenow, near Bairnsdale, to help Merv 3LL erect h.f. aerials and tower for 146 Mc. beam. Traralgon Tech. School Youth Radio Club now has call sign 3ZOT. David 3ZOZ is the push behind this one, and from young members of the club, with whom I come into contact, 3ZOZ is doing a mighty job. 73, Albert Cash.

MOORABBIN AND DISTRICT RADIO CLUB

The Club now meets in its new rooms at the Moorabbin Baseball Club in Summit Avenue, Moorabbin. The first meeting to be held in the new rooms was the October general meeting, which was followed by a tape-recorded lecture on linear amplifiers for s.s.b. The new club rooms are ideal for meetings and social evenings, being self-contained and well equipped, but unfortunately, there is no room for any radio gear.

At the October social evening, held at the home of Kevin 3ARD, a highlight was the presentation to Laura Hall of a jewel case and a sheath of flowers, as a token of the Club's appreciation for making the previous club room available.

The natter-night in November coincided with the Institute Annual Dinner, consequently attendance at the Club was small. Final event of the year will be the Xmas Party in the club rooms on Friday, Dec. 15, 73, Alan 3ASL.

— • • • —

QUEENSLAND

TOWNSVILLE AND DISTRICT

I shall take this opportunity to wish one and all a Merry Xmas and a Happy New Year, hoping that the New Year fufils all your expectations of plenty of QSOs wrapped up in DX.

The last meeting of the local club only saw eight present with a couple of apologies from a few that are interested. One of the chaps journeyed all the way from Charters Towers, some 80 miles distant. Just shows how a new one to the band can become interested. Has also promised to come if the boys put on the old time Xmas break-up.

I was real interested to learn of how a few of the members raised some money for the club. It appears that on the grape vine one of the boys heard of a small chore that could be quite easily done and to donate the proceeds to the building fund. So a quick round up took place and a few hurried along to help out in the mammoth task of folding circulars and placing same in envelopes. Total of some 5,000, which earned the sum of $75. Our thanks must go out to the ones who readily gave their time. So here is hoping that a few other chores come their way. Call on yours truly next time.

Plans are under way to prepare the necessary paper work, etc., for the new club house. Feelers have gone out in many directions to raise the necessary finance. The building will be of first class materials. Sure will be the envy of all when it comes to fruition.

Evie 4EQ and her other half, Charlie 4BQ, did take great part in the recent Scout Jamboree, in setting up a station at the camp site of a half dozen Scout Troops at Bluewater. I take my hat off to these two for a job well done, thanks.

The club has managed to procure quite a lot of tubing, 9 ft., which they are selling to the local lads for their beam arrays. So it augurs well for the Ross Hull Contest this year, when the Z boys hope to work their share of the States and the DX that is offering.

WIRELESS INSTITUTE OF AUSTRALIA

FEDERAL EXECUTIVE

The Institute can now offer annual subscriptions to the following Amateur Journals:—

★ **"QST"—Associate membership and renewals, $6.40.**

★ **R.S.G.B.—"The Bulletin" is only sent with membership of the Society. Send for application form and FREE sample copy of the R.S.G.B. "Bulletin," $6.25.**

★ **"CQ" Magazine, $5.20.**

★ **"73" Magazine, $4.50.**

R.S.G.B. Publications and A.R.R.L. Publications available.

Send remittance to Federal Executive, C/o. P.O. Box 36, East Melbourne, Vic., 3002.

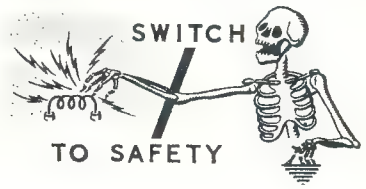

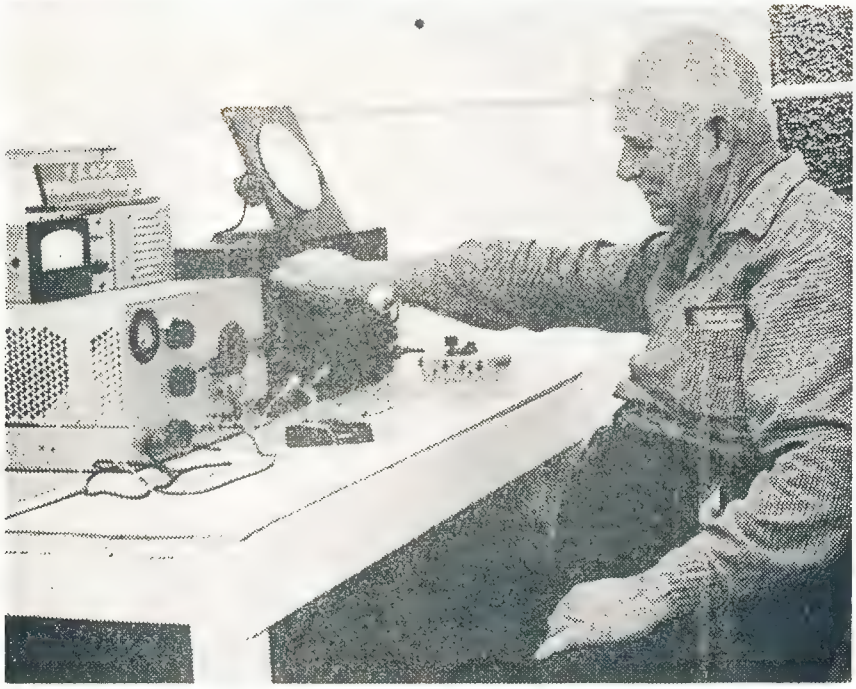

Ipswich and District Radio Club's Public Relations Officer, Mr. Bill Jehn, WIA-L4001, in the operating position of the club station VK4IO. Equipment includes BC342 and home-brew three-band s.s.b. transceiver constructed by club member VK4SF. (Photo "The Queensland Times")

Seems hard to believe that I am about the only member of the club who was in the foundation of the club when it originally started. Here is hoping that at least some of the old originals rejoin in the New Year and help the new boys get the club house which we were unable to get in the past. All social chit-chat curtailed this time. So once again, cheers for the Festive Season. 73, Bob 4RW.

IPSWICH AND DISTRICT RADIO CLUB

I would like to wish everyone the Season's Compliments on behalf of all the Ipswich Radio Club members.

The past month was filled with activity for the club and its members. The 21st birthday party for our secretary, Phil 4ZPE, went off without a hitch.

It is with a little sadness we are saying "cheerio" to Marie s.w.l. L4026, as she is leaving to join her OM, 9WD, in New Guinea.

Several club members spent a most enjoyable week-end camping out at Wyberba National Park, near Stanthorpe, and the fact that it rained almost all night did not dampen their enthusiasm. All made an assault on one of the close mountains nearby and the views from the top were most rewarding, however all attempts to contact club members back home on 40 mx were of no avail.

Our Treasurer, Joan, and her OM, George 4ZLG, are off to ZL land and we wish them a happy holiday. While on the club members who are going away, Col. 4ZMA will be in VK2 for a couple of months in the Wagga Wagga area. He is on 53.032 Mc. and plans to visit Melbourne while away.

The club's 80 mx net at 8 p.m. on Mondays is to be changed to 20 mx for a short time, the QRN on 80 mx is getting a bit thick of a night now; the move to 20 mx is only temporary until our new 2 mx net can be operational. The club's new 2 mx net is on 145.2 Mc. This was decided last meeting, so it seems as if there will be a large order for suitable rocks lodged soon.

The club members are planning to use xtal locked receivers for the net, and the units are hoped to be both for mobile and home station use. The 6 mx net of 53.032 Mc. is not to be dropped, but as its use is restricted to non t.v. hours it is hoped the 2 mx net will be able to be used at all times. The popular fox hunts can now be carried out on 2 mx and all are looking forward to their starting again.

The Famfest at Kingsliffe: The club hopes to have a good representation at the Famfest to be held at Kingscliffe. Some keen members will spend the week-end under canvas, while others will probably take motel accommodation. Merry Christmas and a Happy New Year, 73, Warren 4GT.

— . . . —

SOUTH AUSTRALIA

The monthy general meeting of the VK5 Division for October was held to an average attendance of members and visitors in the club rooms, and opened right on the dot of 8 p.m. There were no apologies, no interstate or international visitors, and the minutes of the previous meeting were read by Tom 5TL, due to the temporary absence of the usual Minute Secretary. Very little Divisional or Federal business was discussed, although the matter of the electrical and contractors' licensing act was discussed by the Chairman, Murray 5ZQ, the matter of the availability of crystals was explained at length by Gilbert 5GX, who also spoke on the plentiful supply of resistors available to members both at the meeting and by writing in to the disposals committee, with special emphasis on the fact that the interests of country members were being taken care of with plenty to spare, full details of which would be available in the next issue of the journal.

The coming Xmas V.h.f. Group Picnic and Barbecue, two separate events, were announced, and Geoff 5TY gave details of the participation of W.I.C.E.N. members in the recent E.F.S. procession, and thanked members for their interest and enthusiasm for anything in connection with W.I.C.E.N. activities.

At this point, members were asked to stand in silence for one minute in respect for the passing of VK5 Life Member, Professor Sir Kerr Grant, and a suitable expression of sympathy was expressed by the Chairman.

The business side of the meeting now being concluded, QSL cards were distributed by George 5RX and a smoke-oh was announced, after which the decks were cleared for the main form of entertainment for the night, to wit, a jumble sale, which is the VK5 way of saying, a buy and sell night, and with all the members present eager to give the auctioneer for the night a suitable welcome—not so suitable to the auctioneer—the name of Warwick W. Parsons, 5PS—PanSy to you—was announced with all the pomp and splendor, to say nothing of the necessary interjections and coarse remarks, usually associated with such an event. Now there is very little that can be said about such a night that has not been said before, so I will not labour the point. (Hurrah!!—Ed.)

☆

The club house of the Ipswich and District Radio Club situated in Deebing St., Ipswich, which was built by club members on land donated to the club by Ipswich City Council. (Photo "The Queensland Times.")

☆

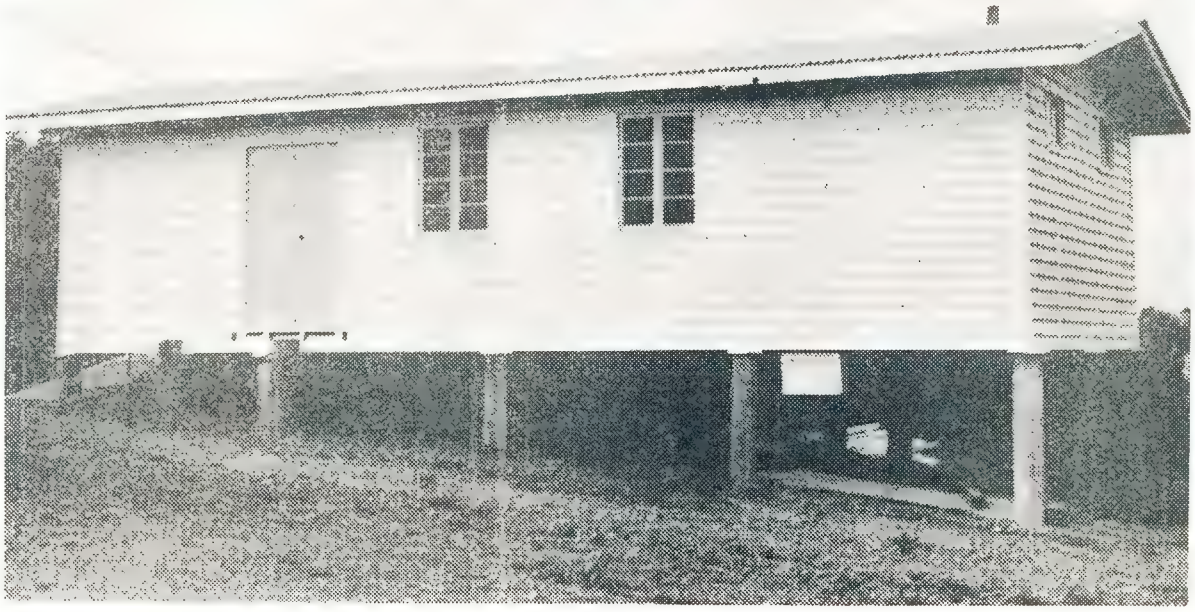

Noticed a real stranger at the meeting, none other than Lionel 5LB whose happy and cheerful face has not been seen at a meeting for many a long year. Not very active, but still interested in the hobby, he told me, when I asked him if he was on the air these days, that he had been on that evening when he worked Athol 5LQ to say that he would be along to the meeting.

Talking of Athol 5LQ, I usually manage a paragraph about him each month, but he is at the moment in my little black book as a possible user of "The Thing."

Had a telephone call this month from an unknown, and unexpected, voice who said in honeyed tones that a certain Mr. Pincott, 3AFJ, had told him at the conference held in VK7 that there were two things that should never be missed if ever passing through Adelaide, to wit, the River Torrens and none other than Pansy 5PS. The voice eventually identified himself as Pierce 2APQ, the VK2 Federal Councillor, who was on his way home via Mount Gambier and Victoria, from the Upper Murray district.

Realising that Federal Councillors were somewhat rare and august personages, especially interstate visitors, I suppressed my suspicious thoughts and invited him and his family to visit my bark hut and partake of some bullant soup and fried lizard.

This was where I made my first mistake. No sooner had I met his XYL, daughter and son-in-law, a charming threesome, if I might say so, than the conversation seemed to drift towards "The Thing," and no matter how hard I tried to stifle such tendencies, I was overcome by superior numbers. To make matters worse, after the evening meal, I was forcibly dragged out to the car parked in the scrub alongside my QTH and, under the threat of injury, forced to examine what is probably the smallest edition of "The Thing" set up under the dash that I have ever seen, and horror of horrors, even forced to handle it.

To add to the indignity, before I could even say product detector, or even harmonic oscillator, the said miniature "Thing" was bodily transported to my shack, connected to my electricity, connected to my shame stricken antenna, and JAs, Ws, ZLs, etc., etc., worked with reckless abandon. I have never been so mortified in my whole life, to think such a thing could happen to me, and all without as much as by your leave. Anyway, despite their attempts to brainwash me on the merits and de-merits of "The Thing," I thoroughly enjoyed their short visit and was sorry to see them leave, but I am finding it a little monotonous to have my XYL, on the slightest provocation, keep on saying "Why don't you buy one of those things that Pierce showed us," plus the fact that the way she says "Thing" makes it sound like an art treasure, rather than the monstrosity that it really is. Nice to have met you Pierce, although my aerial has never forgiven me, because all those signals that you could hear on "The Thing" have vanished, which only goes to show just how ashamed the aerial really is!!

The latest news on Jim Paris—one time Associate members' representative—is that he is slowly on the mend from his heart trouble, and providing he takes normal care, all will be well. Good news Jim.

George 5CV will be looking for my blood. In a recent paragraph in these notes I referred to him as being of "Thunderbird" fame, when it should have been "Firebird" fame. Will you forgive me George? I thangyou—I thangyou!!

Most members of the VK5 Division will have noted with sincere regret the passing of Professor Emeritus Sir Kerr Grant early in October, but few are aware that he was a Life Member of the Division, an honour bestowed upon him many years ago for his interest and availability to help the Division at all times. A regular guest speaker at the Xmas socials pre-war, he will always be remembered for possessing a wonderful knack of putting over complicated matters in a simple, amusing and charming manner.

The subject of as many warmly humorous good stories as any notable Australian, most of which related to what was supposed to be his excessive professorial absent-mindness, he had a never failing sense of humour and an unerring ability to get close to his often boisterous young students. His students took a great delight in pushing his trusty steed—a 1929 vintage air-cooled Franklin—which had travelled a virtual 150,000 trouble-free miles—out of sight round a corner of the Physics building of the University and waiting for the "Prof." to look for it at the front, talking aloud to himself and pretending that he could not remember whether he had driven it to work or not, and if he had, where had he parked it?

On the occasion of the professor's 50th year of association with the University of Adelaide, the daily paper feature writer, Stewart Cockburn, wrote: "The University sometimes needs a bridge to span the intellectual chasm between its cloisters and the community at large. For as long as most people can remember our University has possessed such a bridge in the person of Professor Sir Kerr Grant."

The Division has lost another of its Life Members, and a good friend as well.

What does one do when a friend of long-standing association in Amateur Radio decides to lower the flag of allegiance and turn renegade? The first hint came from one of my spies who sighted a certain gentleman from out Kingswood way boarding the Overland en route to VK3, and returning next day. The second warning came from a source planted in the freight department of a certain airways who informed me that there was a large and heavy parcel awaiting collection by the said certain gentleman from out Kingswood way. The third and final warning came when I resolved a very strong signal on 14 Mc. and from it came the voice of the certain gentleman from Kingswood way -by now certainly no gentleman in my eyes—quacking his way enthusiastically to all and sundry throughout the world, and when I say the world, I definitely mean the world! Yes, you have guessed it, Cec 5BZ has defected, and is enjoying every minute of it!

ARCH VK5XK/2 IN "LOTUS LAND," ON LORD HOWE ISLAND

Arch reports having a good restful holiday. So balmy were the days, he was more inclined to rag chew than flog DX. However, several hundred QSOs were made and many European countries worked. Arch also admits to enhancing the euphoric environment of the island by occasional libations at the shrine of Bacchus, i.e. breasting the bar at the local Bowls Club. He describes it as a "Choir Session". (Sounds like a perfect way to top off a day OM. Nice work; where to next year?)

Putting my pride in my pocket—or what serves these days for a pocket—I decided to ring him and hear the worst, and would you believe it, he had the audacity to tell me, without even batting an eyelid, that he has had more fun out of Amateur Radio in the past month than in all of his previous years, and he regrets not having taken the step a lot earlier. May I be permitted to ring down the curtain on such a sordid story before I break down and burst into tears of disappointment at human nature!!

Have just returned from my short visit to Ballarat, quite unscathed, and in my little sight-seeing trips around the area I was impressed with one or two of the beams that stood so proudly in the skyline. At one of these installations I had stopped the car to take a better view, when out of the side of the house appeared a female figure with what appeared to be some sort of a space weapon and pointed it straight at me. Realising that Pincott (3AFJ) must have tipped them off in Ballarat of my presence, I waited not upon the order of my going, and took off at all of 10 m.p.h. My XYL said that the lady only had a hose with a sprinkler on the end, but don't you believe it—I know those VK3s—and I reckon I was lucky to have escaped. What was I doing in Ballarat? Well, my daughter was adjudicating at the annual physical culture competitions held there, and I felt that she might need some protection from those rough VK3 types!

On the way to Ballarat I naturally passed through Nairne, and it goes without saying that I could not miss the beam on my left in the main street. It never dawned on me that it belonged to Ses 5GP until I was well past, otherwise I would have stopped long enough to say hello to him. When I told him that the beam was certainly a landmark, he somewhat pugnaciously said "and it works too," so I hurriedly agreed with him, especially in view of the bunch of cards that he had just collected from George 5RX.

Carl 5SS was mobile on his recent trip to Port Lincoln. Heard to claim that the 80 watts was a decided improvement on the 13 watts of the old one, and judging by the signal that I heard a couple of times I definitely agree.

Dave 5DS heard on 53.1 Mc. the other night, not from his QTH but from the station of 5JQ, whom he was apparently visiting. How did I know it was Dave? Well, there was just that little something about the voice that gave him away—Hoot Mon!!

Our wandering one-man DX expedition, Arch 5XK, seems to be having a good time from Lord Howe Island, judging by the number and variety of the calls heard chasing him, especially as he is only using 25 watts input. Any time that he contacted a VK5 he was quite anxious to know if we had seen any rain, but nobody was able to cheer him up on that score. I received a communication from him, plus a postcard, but do not subscribe to his somewhat uncouth suggestion that writing to me was the only way he would ever contact me from Lord Howe. Why, for all he knows, I might have been calling and calling him, and he never heard me!!

Following the success of Geoff's (5TY) talk to the Black Forest Methodist Men's Fellowship recently he has received an invitation to strut his stuff at Clarence Park in the near future. This is quite good publicity for W.I.C.E.N., and a few eyebrows were raised at his first talk when he explained just what was being done by a bunch of chaps in their own time, and at their own expense, to try and help should the occasion ever arise.

Noticed that the new call sign books were going off like hot cakes at the meeting, and once again the reaction of the buyers was more than favourable. I wonder just how many of the buyers ever stop to think how much work and time goes into this excellent production, all voluntary at that. It is against my principles to hand out bouquets to any VK3s, but those concerned deserve a pat on the back for their efforts in this direction, even if I have to include Pincott (3AFJ) in these sentiments, hurt me though it may!

Due to a mix-up, the reason not disclosed, a recent edition of the VK5 W.I.A. notes in the local paper appeared under the heading of "Prices for vegetables," much to the delight of my fans and my natural discomfiture. Don't bother to ring or write me regarding the prevailing price of raspberries, everybody else has thought of that one!

Arthur 5HY rang me this week to let me know when was the best time for me to bring my grandson out to his QTH next month to have a free look through his telescope at the celestial beings. During the conversation he told me that recently he had a bunch of young visitors at his QTH for the same purpose, and after the viewing was finished they brought up the question of Amateur Radio, with the result that Arthur packed the 35 or so visitors inside his shack and managed to contact Heard Island, with the chappie at the island giving the youngsters a run down on the life and habits of the seals in his vicinity, much to the youngsters' delight. I understand that the walls of the shack still show a slight outward bulge!

A rather nasty rumour has just reached me that Jim 5FO has joined the renegades and has been quack-quacking all over the place. With all these desertions from the cause, Comps 5EF will have to get himself a bigger black book to write the members of his poultry farm down. You know what you can do with your little black book, Comps—or do you?

Well, here we are again, the Festive Season is upon us, and naturally on behalf of the Council and members of the VK5 Division I extend to all the other Divisions and members, the Compliments of the Season and all that goes with it. To the users of "The Thing," may I say, "tread warily for the next two or three weeks, this is your most dangerous time, many a quack has stopped suddenly around the 24th of this month." Anyway, why should I be so rude, this is the season for burying the hatchet!! 73, de 5PS—PanSy to you!

WESTERN AUSTRALIA

CQ, CQ, gather round mob, and let us see if we can rattle your speaker cones. Firstly, let's count noses and see just who is present and who is A.W.L. There has been so much East-West traffic lately that it's hard to keep accurate records of all the comings and goings. I do know however that among the inwards traffic over the last few months there have been some very well known personalities—Dudley 2DQ, Arie 2AVA, Lew 3LW, Reg 2KI. This is where I start running into trouble because there are many others of whom I have made no mention—excuse please?

Bill 6WY has been doing stirling work extending hospitality to various visitors and it was at Bill's QTH that I had the pleasure of an eyeball with Jan Andresen, LA9TI/MM, who was in port for a few days. This call sign must surely have raised a few eyebrows when heard on 6 mx, particularly in view of the recent JA activity. Not many logs can boast LA9 among their pages I understand that Graham 6ZEZ is going to frame that particular page.

It did these tired old optics a heap of good to see the walls of the Chemistry Lecture Theatre start to bulge under the strain of the huge attendance at the October meeting. If anyone had told me about it I would have been inclined to give them the fishy stare—but seeing is believing. Seating accommodation was taxed to the limit, in fact quite a number of late-comers had to acquire chairs from other rooms. Of course they replaced them afterwards! At the moment, the reason for the record turnout is still undetermined, perhaps the ever popular junk sale which followed had something to do with it.

No further information to hand at the moment concerning the Zone 29 Award, but keep watching this page, as they say in the newspapers.

And talking of newspapers, which we weren't, but we will, did you see the illustration and write up about Wally 6AG in the local? Quite a photogenic old gentleman if I may say so.

John 6ZFD has again turned his back on the glittering illuminations of the city and clutching such vital travelling equipment as toothbrush and 6 mx mobile gear, has made off into the gathering twilight. John will be operating from some obscure location out Hyden way, so keep an ear to the ground for him.

According to John 6ZW, signals he has been receiving from the East have been so strong lately that his garden shrubs have taken on a decided tilt to the West. What do you think? He has certainly been active on 10 mx anyway.

Sounds as though John 6NJ is preparing for bigger and better DXing from Binnu, one of my spies reports the erection of a rhombic and John has been putting out a very healthy signal on 40 mx.

It's not very often that a Ham will openly admit to "swinging the lead". Not so Bob 6RG, but it's not as bad as it sounds because the aforementioned action was all in a good cause. The result was a 40 mx antenna, carefully oriented to favour the Eastern States. The new wire plus a new v.f.o. has enabled him to fire up on 40, but alack and alas, where are all the other stations?

What did you think of the interference tapes which were re-played on the news broadcasts recently? General comments appear to indicate an admiration for the equipment and methods used to analyse and identify the offenders. It will be interesting to see the Report Forms when they come to hand and it is hoped that some effective means will be found to remove the interlopers—toot sweet.

Haven't heard much of Ian 6XX since his return from overseas, but I suspect he is putting in a bit of extra time trying to catch up with Pat 6PH, Aub 6XY and Carl 6XW in their quest for the DXCC. Right fellers?

VK0VK will be Vic's new call sign when he commences to shake the snow out of his glove.

Incidentally, Vic's departure from this Division left a vacancy in the ranks of Council which has been filled by "KK" (VK6IZ), who will no doubt make available his vast experience to the mutual benefit of all concerned. Thanks for stepping into the breach OM.

Heartiest congratulations to VK3 Division for their concerted effort in winning the R.D. Contest this year. A word of commendation also for the runners-up who came within an ace of carrying off the trophy. Well done all—but look out, we'll be trying harder than ever next time.

Well, that just about winds it up for now, all that remains is for me to offer sincere good wishes for the festive season from our Division to your Division.

A Merry Xmas and a Happy New Year. 73, Ross 6DA.

PRESENTATION TO JIM RUMBLE, VK6RU

The presentation was made at the October 1967 meeting of the Wireless Institute of Australia, VK6 Branch, for 21 years' service as QSL Manager of the State. Jim is shown receiving the token from Roy, the President of the VK6 Branch. The token took the form of Jim's own QSL card done in silver and mounted on a stand with words of appreciation on a small silver plate mounted above.

Repairs to Receivers, Transmitters; constructing and testing; xtal conv., any frequency; Q5-ers, R9-ers, and transistorised equipment.

ECCLESTON ELECTRONICS

146a Cotham Rd., Kew, Vic. Ph. 80-3777

Stockists of Radio and Electronic Components for the Amateur Constructor and Hobbyist

First Ring, Write or Call on

WILLIAM WILLIS & Co. Pty. Ltd.

430 Elizabeth St., Melbourne. Ph. 34-6539

HAMADS

Minimum 50c for thirty words. Extra words, 2c each.

Advertisements under this heading will be accepted only from Amateurs and S.w.l's. The Publishers reserve the right to reject any advertising which, in their opinion, is of a commercial nature. **Copy** must be received at **P.O. Box 36, East Melbourne, Vic., 3002, by 5th of the month** and **remittance must accompany** the advertisement.

ANY offers for gear advertised last month? Alf Chandler, VK3LC, Phone 50-2556 (Melb.).

COLLINS TCS-6 Transmitter and Receiver and Speaker, with 230v. a.c. power supply Type S, connecting cables and handbook, $60.00 the lot. O'Brien, San Remo, Vic., Phone 107.

FOR EXCHANGE: Will swap 6 and 2 metre gear for equiv. in photographic equip., particularly enlarger. J. T. Higson, VK3ZTH, 24 Stapley Cres., Chadstone, Vic. Phone 56-3428.

FOR SALE: Altimeter "Kollsman," guaranteed accurate, ideal for survey purposes or v.h.f. field work, $39. Also Bendix Freq. Meter and Calibration Book, $29. VK3AOK, Phone 560-9168 (Melb.).

FOR SALE: Galaxy V. Transceiver plus Galaxy Calibrator, with a.c. power supply, Eddystone speaker, Turner microphone p.t.t., and some spare tubes including finals, in excellent condition, $450. VK6GU Tri-band Beam with tuning unit, prop. pitch motor, selsyn indicator, power supply and cables, and 40 ft. self-supporting tower; reasonable offer. Bill Clowes, VK6RX, 4 Nicholson Rd., Subiaco, W.A., 6008.

FOR SALE: Geloso G209 Receiver, Q Multiplier OF-1, pre-selector, 160 metre converter, $300. Wanted: Cabinet for 21 in. Precedent t.v. Wm. F. Sievers, 132 Orrong Rd., Toorak, Vic., 3142. Phone 24-4154.

FOR SALE: Heathkit MT1 80-40-20-15-10 a.m./c.w. Transmitter, 90 watts c.w., 35 watts a.m., complete with Heathkit HP20 a.c. power supply and set spare tubes, $60. D. D. Kinnersley, VK4XI, 27 Oxley St., Edge Hill, Qld., 4870. Phone 53-2068.

FOR SALE: Oregon mast 38 ft. 4 x 4 inch, complete with climbing facilities and anchor post, etc., $20. AT5 Transmitter, complete, and 12v. to 220v. 40 mA. d.c. Rotary Transformer—What offers? VK3LS, Phone 379-3619, 5 Hillsyde Pde., Strathmore, Vic.

FOR SALE: Transmitter, Heathkit Apache, with SB-10 s.s.b. adaptor, mike, $200. VK5OD, 2 Claring Bould Rd., Christies Beach, S.A.

FOR SALE: V.h.f. Transceiver, Heath HW20, 144-148 Mc., v.f.o. plus 4 switched xtal positions, sens. less than ½ mV., QQE03/12 final, c.w. and phone, in-built 12v. d.c. power supply for mobile use, instruction manual, will consider terms. $190. VK3AOK, Phone 560-9168 (Melb.).

FOR SALE: (1) A.W.A. 3BZ Receiver, 200 Kc. to 30 Mc., complete with built-in 240v. a.c. power supply and S meter; good condition, $35. (2) 3 k.v.a. 240v. 50 cycles Petrol Driven Alternator, complete with governed Coventry Climax 4-cyclinder engine and control box; all on wheeled trolley; f.b. condition, $200 or near offer. Hepburn, 4 Elizabeth St., East Brighton, Vic., 3187, Tel. 96-2414 evenings.

GALAXY V. and Galaxy V.f.o. with a.c. power supply, guaranteed new, retired from Ham Radio, give away at $500. J. Marston, 187 Aberdeen Pde., Boondall, Qld. (Brisbane Phone 69-1645).

SALE, Specials for SWL's: General Coverage Receiver: Marconi CR100, 12 valves, 4 diodes, $80; AR7, 12 valves, rack mounted, $80; AMR200 plus LF Rx, 8 bands, 130 Kc. to 30 Mc., 23 valves, in 5 ft. rack, $130. Ham Bands Only: 16 valves, 5 diodes, Geloso Front-End, 85 Kc. i.f., $100. Receivers are equipped with xtal filter, S meter, product detector and noise limiter. All in very good condition. H. L. Roach, 28 Foster Ave., Glenhuntly, Vic. Phone 58-3757.

SELL: Channel Master TV Aerial Rotator and Direction Control Unit. Ideal for v.h.f. beams. Little used. $25. K. Hoffmann, VK4ZKH, 10 Druce St., Toowoomba, Qld., 4350.

SELL: One Pye Base, low band, less xtals, good condition. Also one Contax Taxiphone converted to 53 Mc., less xtals, clean condition. No reasonable offer refused. VK3UT, Private Bag 40, Warrnambool, Vic.

SELL: Z Match Antenna Coupler, 80-10 mx, $20. Heathkit SWR Bridge $20. 522 Tx with a.c. p.s. complete with bias supply, $32. Large Eddystone Tx Dial in prof. black crackle cabinet, has temp. comp. v.f.o. coil, etc., $25. 20 mx wide spaced Beam, 1½ to 1⅜ in. diam. elements, all aluminium including 21 ft. boom, $44. Dow Key Antenna Change-over Relay, 110v. a.c., $18. 230v./110v. 300w. Auto Trans., $5. 6 mx home-brew Low Pass Filter, $4. 3 only Avo Electronic Testmeter (v.t.v.m. and multimeter), Model 4, as new, $95. Tx or Amp. Cabinet, large, $3. V.t.v.m. Meter and chassis, $4. 2 only Multimeters, $3 pair. Valve and Circuit Tester, $15. Assort. R.Hs. and A.Rs., approx. 50, $5. 2 only 12BY7, 2 only 12AX7, 3 only 6DQ5, new, $6 lot. S.s.b. balanced armature Microphone, $8. S.s.b. balanced armature Mic. Inserts, $2.50. Phone 848-3018 (Melb.).

SEND two 5c stamps for catalogue of bargain priced new and used radio equipment and instruments. Eastern & Mountain District Radio Club, Disposals Committee, P.O. Box 33, Olinda, Vic., 3788.

WANTED: Communications Receiver in good condition, preferably general coverage, with facilities for s.s.b. and bandspread. Peter Simpson, 5 Lawrence St., Glenroy, Vic. Phone 306-5456.

WANTED: Disposals Mic. Trans., type 10K/245 or 10K/246. Good price for any quantity. O'Brien, San Remo, Vic.

WANTED: Geloso Front-End Unit 2620A, less valves. State price, must be in good condition. Colin King, 35 Louisa St., Gympie, Qld., 4570.

WANTED: Good, commercial, Tri-band Beam. Details and price to VK5ZE, 20 Blencowe St., Elizabeth Grove, S.A.

WANTED: Manual for AT5-AR8. W. Jennings, phone 93-6062 (Melb.).

WANTED TO BUY: Pre-1927 Radio Sets and parts, especially bright emitter and early tx valves, neutrodyne rx's. Also magazines (not Listener In) and A.R.R.L. Handbooks, pre-1934. F. K. McTaggart, VK3NW, 37 Ryeburne Ave., Hawthorn East, Vic., Phone 82-1141.

INDEX TO VOLUME 35—1967

ANTENNAE

A "Corner" Antenna for 7 Mc. Apr. p.7
An All-Band Curtain Array .. May p.13
A Parabolic Antenna .... Jun. p.9
Inflatable Radio Antenna Mast used in Vietnam .... Jun. p.17
Long Quads for 144, 432, 1296 Mc. .... Jun. p.7
Rhombics and Chaos .... Dec. p.11
"Supergain" Antenna .. .. Apr. p.6
Technical Correspondence:
Series Phased Array for 14 Mc. .... Jan. p.19

BOOK REVIEWS

How to Build an Inexpensive Transistor Radio .. .. Jul. p.18
Radio Amateur's Handbook .. Jul. p.18
The Radio Amateur's Operating Manual .... May p.13
"The World of Mr. Sheraton" Dec. p.8
"World at Their Finger-Tips" Dec. p.8
World Radio T.v. Handbook .. Jul. p.18

CONTEST RULES AND RESULTS

John Moyle National Field Day Contest:
1967 Results .... Jun. p.21
Errata .... Jul. p.17
1968 Rules .... Dec. p.15
Remembrance Day Contest:
1967 Rules .... Jun. p.16
1967 Results Nov.p.18
Ross Hull Memorial Contest:
1966-67 Results .. .. May p.15
1967-68 Rules .... Oct. p.11
VK-ZL-Oceania DX Contest:
1966 Results .... May p.14
1967 Rules Aug.p.11
1966 "CQ" W.W. Contest, VK Results Aug.p.19

INSTRUMENTS

Conversion of Crystal Calibrator No. 10 .... Jul. p.3
Simple Two-Tone Test Generator .... Sep. p.6
The Impedance Meter .. .. Mar. p.7
The Varimatcher .. . . Feb. p.7

MISCELLANEOUS

Amateur Licences in U.K. Aug.p.18
A.R.R.L. Tech. Merit Award Dec. p.17
Australia's First Orbiting Satellite .... Aug. p.3
Australian D.X.C.C. Countries List .. .. Jan. p.14
Australian DX Century Club Award .... Jan. p.13
Australian V.h.f. Century Club Award .... Jan. p.13
A VK2 in W-Land .... Apr. p.15
Awards for Technical Articles Apr. p.23
Camp Technology, 1967 .. .... Apr. p.16
Changes for Mobile Radio Telephone Services .. .. Sep. p.20
Correspondence re Federal Comment "On Growing Up" Jan. p.21
Do You QSL? .... Jan. p.12
God's Gift to the Ham: The XYL .... May p.9
Handicapped Inc. Aug.p.13
Hints and Kinks:
In-built Batteries .... Sep. p.11
Intruder Watch Service .. .... Oct. p.24
Light Wave DX? .... Apr. p.15
More YO Awards .... Jan. p.11
Of Jamborees and Cubs and Us Oct. p.9
Our Hobby opens the Door to Happiness .... Oct. p.17
Position of Planets Linked to Solar Flare Prediction .. .... Oct. p.17
Project Australis Newsletter May p.21
Radio Messages are Secret .. Jun. p.17
Some Observations on Amateur Radio in Britain and Canada in comparison with Australia Mar.p.19
What is an Amateur? Mar.p.20
W.I.A. Federal President's Report .... May p.19
W.I.A. Federal President's Speech, Convention Dinner May p.18
W.I.A. 50 Mc. W.A.S. .. .. Feb. p.20
W.I.C.E.N. in Tasmania during the Bush Fire Disaster .... Apr. p.2
Wireless Institute of Australia: Its Administration Mar.p.13
Worked All Vic. National Parks Award .... Dec. p.17
Worked From All Vic. National Parks Award .. .. Dec. p.17
World Association of Methodist Radio Amateurs and Clubs .... Sep. p.10
10th Jamboree-on-the-Air .... Jul. p.4
1967 R.D. Broadcast by Hon. Allen Fairhall, M.P., Minister for Defence .... Oct. p.12

POWER SUPPLIES

An A.c. Supply for 122 Set May p.10
A Synthetic Battery for Your Carphone—
Part One .... Feb. p.3
Part Two .... Apr. p.5
The Vibrator Eliminator .... May p.2
Transistorised Regulated Power Supply .... Oct. p.3
Versatile Loads for Power Supply Tests .... Feb. p.5

RECEIVERS

A Transistorised Two-Metre Converter .... Jun. p.5
A Transistorised 80 Metre Receiver .... Mar. p.8
Further Ideas .... Jun. p.11
Converting A.W.A. Low-Band Carphones for 6 Metres .. .... Dec. p.3
Getting Started on 6 .. .. Jun. p.12
Modifications to B28/CR100 Receivers .... Oct. p.5
Modified "Q" Multiplier in HE80 Receiver .... Oct. p.10
Overtone Operation of Quartz Crystals:
Part One .... Mar. p.2
Part Two .... May p.5
Simple and Effective Noise Limiter .... Oct. p.10
Simple Silicon A.g.c. Circuit Sep. p.5
Simple Squelch Circuit .... Jan. p.12
Six and Two Cross-Band Duplex Mobile Nov.p.12
Solid State H.f. Converters .. Sep. p.3
The VK3ABP Six-Metre Converter .... Jun. p.3
The VK3 V.h.f. Group 6-Metre Converter .... Nov. p.5
Errata .... Dec. p.20
Transistorised B.f.o. .... Apr. p.12
Tuneable I.f. for Converters Aug.p.12
Two-Metre Transistorised Converter .... Jun. p.8

SIDEBAND

A Field-Effect Valve .... Apr. p.13
Another U.K. Transceiver .. Apr. p.13
A Printed Circuit Transistorised S.s.b. Generator .... Dec. p.9
A Straight S.s.b. Exciter .. .... Jul. p.13
Built-in V.f.o's and Heat .... Jul. p.13
Cathode Tuning and Matching Circuits Mar.p.21
Choice of Tubes Mar.p.21
Clipper Type Compressors .... Jun. p.19
Field-Effect Transistors .... Apr. p.13
Four-Tube Linear Amplifiers Sep. p.13
Grounded Grid Input Circuits Mar.p.21
Grounding Those Grids .... Sep. p.13
Heater/Cathode Emission .... Apr. p.13
"How can I get on Sideband?" Oct. p.7
Improvements to Swan 240 Transceiver Nov.p.15
More Transistor Sideband .... Dec. p.5
Several Common Questions .. Oct. p.7
Sideband on an Old Receiver Nov.p.11
Single Sideband on V.h.f. .. . Mar.p.10
S.s.b. on V.h.f. .... Sep. p.13
The Coupled Tuned Circuit R.f. Phase Shift Network .. Sep. p.7
"The Thing"—Transistorised:
Part Two .... Apr. p.9
Part Three .... Jul. p.5
Part Four .... Aug. p.7
Transistorised Sideband .. .... Feb. p.11
Transistor Sideband—Increase Your Talk Power .... Sep. p.11
Variations on Cathode Drive Mar.p.22
Which Exciter to Build? .. .... Oct. p.7
Why Not Double Sideband? .. Jan. p.17
5 Watts S.s.b.—Home-brew without Hangover .... Jan. p.9

TECHNICAL MISCELLANEOUS

Fairchild Announces First Aust.-made Zener Diodes .. Jan. p.21
Field Effect Transistors Nov.p.17
Propagation of Amateur Signals allied with Ionospheric Predictions .... Jan. p.2
Errata .... Feb. p.24
Modification of BM3 Mike for Switch-to-Talk Operation .. Dec. p.8
RTTY the Easy Way—or—Driftitis Controlled .. .. Nov. p.8
Technical Correspondence:
PADT50 Transistors .. .. Jan. p.19

TRANSMITTERS

Converting A.W.A. Low-Band Carphones for 6 Metres .. .... Dec. p.3
Getting Started on 6 .. .. Jun. p.12
List of Articles on Transistor Transmitters .... Apr. p.17
Overtone Operation of Quartz Crystals:
Part One .... Mar. p.2
Part Two .... May p.5
Six and Two Cross-Band Duplex Mobile Nov.p.12
Technical Correspondence:
Articles on Transistor Tx's Apr. p.16
Transistor R.f. Power Amp. Sep. p.14
Transistor Amplifier Design:
Part Four .... Jul. p.9
Part Five .... Aug. p.5
Transistorised 2-Metre F.M. Transmitter .... Dec. p.13

A LARGE RANGE OF TRANSMITTERS, RECEIVERS, TEST GEAR, AND DISPOSALS RADIO PARTS AVAILABLE

- **TECH TO3 3″ OSCILLOSCOPE**
  Specifications.—**Vertical Axis**: deflection sensitivity, 0.1v. p-p/cm.; freq. characteristics, 1.5 c/s. to 1.5 Mc.; input impedance, 2 megohms, 25 pF.; calibration voltage, 1v. p-p/cm. **Horizontal Axis**: deflection sensitivity, 0.9v. p-p/cm.; freq. characteristics, 1.5 c/s. to 800 Kc.; input impedance, 2 megohms, 20 pF. **Sweep Osc.**, 5 ranges: 10-100 c/s., 100 c/s.-1 Kc., 1 Kc.-10 Kc., 10-80 Kc., 50-300 Kc. **Synchronisation**: Internal (negative or positive), external, or line. Cathode ray tube, 3KP1F. **$136.00.**

- **TECH TE40 MILLIVOLTMETER**
  AC volts: 0.01, 0.03, 0.1, 0.3, 1.0, 3, 10, 30, 100, 300. Accuracy: 5 c/s. to 1.2 Mc. ± 2 db. (db. scale +2 to —25 db.); 10 c/s. to 1 Mc. ±1 db.; 20 c/s. to 250 Kc. ±0.2 db. db. scale: —40, —30, —20, —10, 0, +10, 20, 30, 40, 50 dbm. **$59.25.**

- **TECH TE65 V.T.V.M.**
  DC volts: 1.5, 5, 15, 50, 150, 500, 1500. AC volts: 1.5, 5, 15, 50, 150, 500, 1500v. r.m.s.; 1.4, 4, 14, 40, 140, 400, 1400, 4000v. p-p. Resistance: R × 10, 100, 1K, 10K, 100K, 1M, 10M. Decibel: —10 db. to +65 db. **£50.00.**

- **MILLER 8903B 455 Kc. PRE-WIRED I.F. STRIPS**
  Comprises two i.f. stages, diode detector, in-built a.v.c, 55 db. gain, NPN silicon transistors. DC requirements, 6 v.d.c. 2 mA. Size, 1½″ x ½″ x ½″. **$8.70** inc. tax.

- **STAR SR700A AMATEUR-BAND RECEIVER**
  Freq. coverage: 80 mx, 3.4-4.0 Mc.; 40 mx, 7.0-7.6 Mc.; 20 mx, 14.0-14.6 Mc.; 15 mx, 21.0-21.6 Mc.; 10 mx (A), 28.0-28.6 Mc.; 10 mx (B), 28.6-29.1 Mc.; 10 mx (C), 29.1-29.7 Mc. Triple conversion: 1st i.f., 3.4-4.0 Mc.; 2nd i.f., 1650 Kc.; 3rd i.f., 55 Kc. Sensitivity: a.m. less than 1 uV. for 10 db S+N/Noise Ratio; c.w./s.s.b. less than 0.5 uV. for 10 db. S+N/Noise Ratio. Selectivity: 0.5 Kc., 1.2 Kc., 2.5 Kc., 4 Kc., all at —6 db. In-built 100 Kc. Crystal Calibrator (crystal supplied). **$461.50.**

WANTED TO BUY

Communication Receivers, Test Equipment, etc. Call, write or phone Equipment inspected and picked up at your convenience any night or week-end.

- **STAR ST700 SSB TRANSMITTER**
  250w. p.e.p. Employs high efficiency AB2 final. Incorporates vox, p.t.t., mechanical filter for max. suppression. Freq. coverage: 80 mx, 3.4-4.0 Mc.; 40 mx, 7.0-7.6 Mc.; 20 mx, 14.0-14.6 Mc.; 15 mx, 21.0-21.6 Mc.; 10 mx (A), 28.0-28.6 Mc.; 10 mx (B), 28.5-29.1 Mc.; 10 mx (C), 29.1-29.7 Mc. Emission: CW, LSB, USB, AM with carrier injection. In-built c.w. sidetone monitor. Clickless keying with unique tone osc. system (no keying of relays). **$519.20** inc. tax. Note: SR700A and ST700 couple together for complete transceive operation.

- **VALVE SOCKETS, P.T.F.E.**
  7-pin complete with can, **20c ea.**; 9-pin complete with can, **50c ea.** Ideal for 144 or 432 Converters or Tx's.

- **ELECTROLYTIC CONDENSERS**
  50 uF., 125v.w. pigtail type. Late manufacture. **20c ea.**

- **A111 9 Mc. SSB EXCITER**
  A fibre-glass printed circuit board, the finest German crystal filter, diode ring modulator, and solid state circuitry all contribute to make the A111 the finest SSB Exciter available. Specifications: Sideband suppression, 80 db.; carrier sup., 65 db.; audio freq. response, 350 to 3,000 cycles; mic. input, 1 mV. on 5K ohm load. Incorporates vox amplifier and relay amp. Price with KVG. **XF9B** Filter, **$240.**

- **A112 5 Mc. VFO**
  Freq. coverage: 4950 to 5550 Kc. Freq. stability better than 100 c/s. over 12 hrs. long term; better than 8 c/s. over 10 mins. if enclosed in suitable box. Output: 350 mV. on 220 ohm load. Price **$22.**

- **EICO 753 TRI-BAND SSB TRANSCEIVER KIT**
  180w. p.e.p. on SSB or CW, 80w. on AM. 5.2 Mc. crystal filter. Sideband sup., —40 db.; carrier sup., —50 db. Receiver sensitivity: 1.0 uV. for 10 db. signal to noise. Receiver selectivity, 2.7 Kc. at 6 db. 10 Kc. receiver off-set tuning. Printed circuit i.f. strip. Pre-aligned xtal filter. Freq. coverage: 80 mx, 3490-4010 Kc.; 40 mx, 6990-7310 Kc.; 20 mx, 13890-14410 Kc. (LSB 80 and 40 mx, USB 20 mx). Price **$328.78.**

- **PETERSEN RADIO PR100 CALIBRATORS**
  Comprising 1 transistor 100 Kc. crystal oscillator, 1 transistor emitter follower, fibre-glass printed circuit board, trimmer on crystal for zero beat with WWV. Crystal accuracy 0.005%. Power requirements, 15v.d.c. 14 mA. Price **$22** inc. tax and plus postage.

- **K109 SWR METERS**
  75 ohms or 52 ohms input and output. SWR 1 : 1 to 1 : 10 ±3%. 100 micro-amp. meter. **$18.50.**

- **CO-AXIAL CABLE**
  UR70, ¼″ diam., 72 ohms, supplied with Belling Lee Connector. **27 yards $2.00.** Post and packing 75c.

- **RESISTORS**
  Wide range of values available in ¼ watt, ½ watt or 1 watt. Welwyn, I.R.C., Ducon, and Erie. **$2.00 per 100.**

- **CAPACITORS**
  Miniature 600v.w. pigtail type: 0.001, 0.005, 0.0002, 0.0005. Also Ceramic. **$2.00 per 80.**

- **POTENTIOMETERS**
  Wire-wound, 100 ohms to 100K ohms, 1 watt to 3 watt. **40c ea.** Carbon, 100 ohms to 5 megohms, **20c ea.**

- **VALVES**
  New Philips: QB/250 (813), $10; 815, $1; 807, $1.50; TZ40, $1.50; 416B, $4; VR150/30 and VR105/30, 75c ea. or 3 for $2; ECC33 (6SN7), 40c.; 6AM5, 50c; 6AC7, 20c or 12 for $2; 6K8, 75c or 3 for $2; 6J7, 40c or 6 for $2; 6J6, 50c or 5 for $2; EF50, 20c.

- **TELEMAX T75 FREQUENCY METER**
  85 to 1,000 Mc. Heterodyne type with 5 Mc. internal standard. VHF version of BC221. Immaculate condition. **$150.**

- **PANEL METERS, P25 TYPE**
  100 uA., $6.95; 500 uA., $5.25; 1 mA., $4.50; 10 mA., $4.50; 50 mA., $4.50; 100 mA., $4.50; VU meter, $6; S meter, $4.80.

ALL ITEMS FREIGHT EXTRA

UNITED TRADE SALES PTY. LTD.

280 LONSDALE ST., MELBOURNE, VIC. (Opp. Myers) **Phone 32-3815**

QA

QUALIFICATION APPROVAL

The Department of Defence, Joint Service, has awarded Qualification Approval to PYE PTY. LTD. for Quartz Crystal Units.

Q.A. products are recommended where quality and reliability are essential for Military and professional equipments.

QUARTZ CRYSTALS

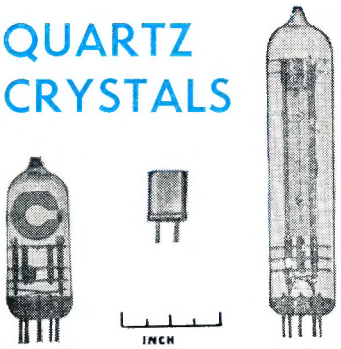

Pye offer a range of Quartz Crystal Products manufactured under clean room conditions to stringent specifications and using elaborate precision testing equipment.

Our Quality Control system operates under approval issued by the Director of Quality Control Board, Department of Air. Pye Pty. Ltd. has adequate facilities and an established system of Quality Control and has been registered as a Quality Control Board Approved Organisation.

We produce Quartz Crystal Units
Quartz Crystal Filters
High Stability Crystal Oscillators
Temperature Compensated Crystal Oscillators

Many items are held in stock. Special Crystal frequencies can be quickly processed from our blanks library.

HIGH STABILITY OSCILLATORS

Actual Size

CRYSTAL FILTERS

Actual Size

Our crystal engineers have had a long experience designing and producing crystal products to meet the exacting specifications required by the Armed Services, Department of Supply, D.C.A., P.M.G's Department and other organisations.

Let PYE engineers help you. Write now and discuss your problem, without any obligation.

New "QUARTZ CRYSTAL UNITS" booklet released. — — Send for YOUR copy. Posted FREE.

AUSTRALIAN MADE

PYE PTY. LTD.

CRYSTAL DIVISION

Q.C.B. APPROVED ORGANISATION

MELBOURNE	P.O. Box 105, Clayton, Vic., 3168	Phone 544-0361
BRISBANE	97 Merivale Street, South Brisbane, Qld., 4101	4-1571
SYDNEY	59 Arundel Street, Forest Lodge, N.S.W., 2037	68-4111
ADELAIDE	1 Ifould Street, Adelaide, S.A., 5000	23-3979
PERTH	151-155 Brisbane Street, Perth, W.A., 6000	28-4338
HOBART	141 Murray Street, Hobart, Tas., 7000	3-3707
CANBERRA	P.O. Box 766, Canberra City, 2601	49-6677
GEELONG	38 Little Ryrie Street, Geelong, Vic., 3220	21-5844